rexroth
A Bosch Company

NYCe 4000

Linear motion system
LMS Design Guide

Reference
R911386072

Edition 13

Title NYCe 4000
Linear motion system
LMS Design Guide

Type of Documentation Reference

Document Typecode DOK-NY4000-LMS*DESIGN*-PR12-EN-E

Internal File Reference RS-928008ac1bb341c1c0a802867eeb29c7-13-en-US-5

Record of Revision

Edition	Release Date	Notes
DOK-NY4000-LMS*DESIGN*-PR01-EN-E	03/2018	First edition
DOK-NY4000-LMS*DESIGN*-PR02-EN-E	03/2019	2nd edition
DOK-NY4000-LMS*DESIGN*-PR03-EN-E	08/2019	3rd edition
DOK-NY4000-LMS*DESIGN*-PR04-EN-E	06/2020	4th edition
DOK-NY4000-LMS*DESIGN*-PR05-EN-E	03/2021	5th edition
DOK-NY4000-LMS*DESIGN*-PR06-EN-E	08/2021	6th edition
DOK-NY4000-LMS*DESIGN*-PR07-EN-E	11/2021	7th edition
DOK-NY4000-LMS*DESIGN*-PR08-EN-E	11/2022	8th edition
DOK-NY4000-LMS*DESIGN*-PR09-EN-E	12/2022	9th edition
DOK-NY4000-LMS*DESIGN*-PR10-EN-E	03/2023	10th edition
DOK-NY4000-LMS*DESIGN*-PR11-EN-E	08/2023	11th edition
DOK-NY4000-LMS*DESIGN*-PR12-EN-E	08/2024	12th edition
DOK-NY4000-LMS*DESIGN*-PR13-EN-E	04/2025	13th edition

List of trademarks Products in this publication are referred to by their general trade names. In most, if not all cases, these designations are claimed as trademarks or registered trademarks of their respective companies.

Copyright © Bosch Rexroth AG 2025

All rights reserved, also regarding any disposal, exploitation, reproduction, editing, distribution, as well as in the event of applications for industrial property rights.

Liability The specified data is intended for product description purposes only and shall not be deemed to be a guaranteed characteristic unless expressly stipulated in the contract. All rights are reserved with respect to the content of this documentation and the availability of the product.

Published by Bosch Rexroth AG
P.O. Box 7170 ■ 5605 JD Eindhoven ■ The Netherlands
http://www.boschrexroth.com

Table of Contents

Page

1 Introduction ... 1
1.1 What is LMS ... 1
1.2 Intended audience ... 1
1.3 What is in this manual ... 2
1.4 Abbreviations ... 2
1.5 References ... 3

2 Linear Motion System overview ... 5
2.1 Introduction ... 5
2.2 Main specifications ... 5
2.2.1 General ... 5
2.2.2 LMS maximum system configuration ... 5

3 Hardware overview and specifications ... 7
3.1 Introduction ... 7
3.2 Hardware overview ... 7
3.2.1 Mechanical construction ... 7
3.2.2 Complete LMS including control components ... 8
3.3 Specifications LMS components ... 12
3.3.1 Coils ... 12
3.3.2 Carrier with magnet plates ... 14
3.3.3 Sensors ... 15
3.4 Specifications control components ... 16
3.4.1 System housings ... 16
3.4.2 Motion Control Unit ... 16
3.4.3 Drive module ... 17
3.4.4 SERCOS III Master module ... 17
3.4.5 PC ... 18
3.4.6 PLC ... 18
3.5 Specifications electrical components ... 18
3.5.1 Power supplies ... 18

4 Hardware components selection ... 21
4.1 Introduction ... 21
4.2 System specifications and requirements ... 22
4.2.1 Introduction ... 22
4.2.2 Position accuracy ... 22
4.2.3 Carrier ... 22
4.2.4 Motion profile and airgap ... 22
4.2.5 Number of carriers and overall system layout ... 23
4.3 Friction force ... 23
4.4 Drive size calculations ... 24
4.5 Curved track geometry ... 24

Page

4.5.1 Introduction ... 24
4.5.2 Curve radius ... 24
4.5.3 Coil size ... 26
4.5.4 Curved track specification ... 26
4.6 LMS component selection ... 26
4.6.1 Coils ... 26
4.6.2 Magnet plates ... 27
4.6.3 NYCe 4000 node and drives ... 27
4.6.4 Sensors ... 28
4.7 Guiding system ... 28
4.8 Mechanical design rules ... 29
4.8.1 Guiding roller block alignment ... 29
4.8.2 Coil placement ... 30
4.8.3 Hall sensor ... 31
4.8.4 MR sensor and magnetic scale ... 33
4.8.5 Curved track coil and sensor placement ... 35
4.8.6 Carrier design ... 36
4.8.7 Magnet plate and coil mounting ... 36
4.8.8 Track stiffness ... 39

5 Electrical implementation ... 41
5.1 Introduction ... 41
5.2 Wiring shielding and grounding ... 41
5.2.1 Introduction ... 41
5.2.2 Wiring and shielding ... 41
5.2.3 Grounding ... 43

6 Safety ... 45
6.1 Introduction ... 45
6.2 Mechanical safety ... 45
6.3 Electrical safety ... 45

1 Introduction

1.1 What is LMS

The Linear Motion System, abbreviated to LMS, is based on an inverse linear motor principle. The base of the mechanical construction contains the coils and position sensors. Carriers with a magnet plate are placed on a guiding system. The carrier is moved to the commanded position by the controlled magnetic force field generated by the coils. The signals of the sensors generate position feedback information.

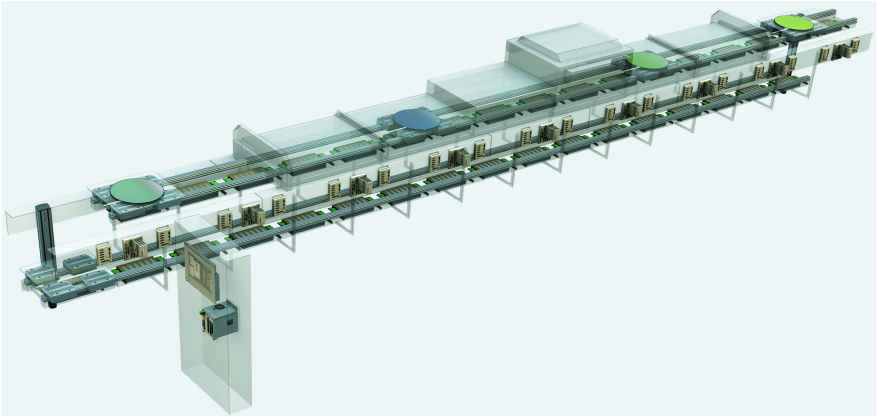

Fig. 1-1: Schematic presentation of a Linear Motion System (LMS)

The fixed mechanical construction of an LMS contains a guiding system with coils and position sensors, on which one or more carriers can move. In software, a NYCe 4000-based LMS consists of one or more tracks. A track contains coils and sensors. The engineer who commissions the LMS is free to define LMS tracks as desired. However, usually tracks are defined as the coils and sensors in one guiding system. All coils and sensors are connected to the NYCe 4000 system hardware. An extensive API is available to develop the LMS-based application which can run on a PC. It is also possible to integrate a PLC-based application with NYCe 4000 LMS.

Drawings in this manual are not scale-accurate, but are intended for illustration purposes only.

1.2 Intended audience

This manual is intended for system design engineers who want to integrate an LMS in their application. This manual guides the system designer through the design and selection process. Bosch Rexroth always intends to make life easier for the application engineer. However, the main focus is to provide maximum flexibility based on the type of applications that can be realized with a Linear Motion System. As a consequence, the maximum flexibility comes at the cost of requiring more knowledge from the user and more responsibility within the application.

1.3 What is in this manual

This manual provides an explanation of all components of an LMS and guidelines to make good choices for the integration of an LMS in various applications. Due to the broad variety of possible applications this manual does not narrow down the choices to one specific solution. Per application, different choices can result in a good design, thus some intuition in development and integration of an LMS in your application is still required.

- chapter 2 "Linear Motion System overview" on page 5 gives the system designer an overview of the main specifications of an LMS, and the maximum component configuration. Major components are the track(s) and control components.
- chapter 3 "Hardware overview and specifications" on page 7 describes the components of an LMS. The mechanical construction consists of the guiding system, coils, carrier with magnet plates, LMS sensors and, when MR sensors are used the magnetic scale. The control components include a NYCe 4000 system (a system housing with a Motion Control Unit, MCU, and one or more drive modules or the SERCOS III Master module), power supplies, a PC, and (application dependent) a PLC.
- chapter 4 "Hardware components selection" on page 21 presents a flowchart to guide the system designer through the component selection based on the requirements of the application and LMS-specific criteria such as track geometry, component selection, and construction aspects of an LMS. The design steps are discussed in more detail in the remainder of this chapter.
- chapter 5 "Electrical implementation" on page 41 describes the NYCe 4000 wiring and grounding requirements of an LMS.
- chapter 6 "Safety" on page 45 describes some safety aspects, mechanical and electrical, of an LMS.

1.4 Abbreviations

The following table gives a summary of abbreviations used in this manual.

Abbreviation	Description
API	Application Programming Interface
CM	Carrier Management
CMC	Carrier Management Combined
CPA	Carrier Position Adjustment
DriveLink	SERCOS III connection based drives (IndraDrive and ctrlX DRIVE)
IEEE	Institute of Electrical and Electronics Engineers
LMS	Linear Motion System
MCU	Motion Control Unit
NY4112	MCU with 2 IEEE802.3 (ethernet) connections Requires Software LMS 47VRS

Abbreviation	Description
NY4114	MCU with 3 IEEE802.3 (ethernet) connections Requires Software LMS 50VRS or higher
NY4120/10	PWM Drive Module for LMS
NY4150 NY4150/10	SERCOS III Master Module
PE	Protective earth
PLC	Programmable Logic Controller
RTLC	Runtime Track Layout Changes
PTC	Positive Temperature Coefficient (sensor)
SERCOS III	Third generation SERCOS (Serial Real time Communication System) drive communication protocol based on the Ethernet physical hardware architecture
XML	Extensible Markup Language

Tab. 1-1: Summary of used abbreviations in this manual

1.5 References

- NYCe 4000 Standard Housings & Accessories manual, R911337672.
- NYCe 4000 Hardware System Manual, R911337671.
- Rexroth IndraDrive Cs Drive Systems with HCS01 Project Planning Manual, R911322210
- Rexroth IndraDrive Supply Units, Power Sections HMV, HMS, HMD, HCS02, HCS03 Project and Planning Manual, R911318790 (for the power units).
- IndraDrive Control Sections CSB02, CSE02, CSH02, CDB02 Project and Planning Manual, R911338962 (for the Control units).
- IndraControl XM21, XM22 Operating Instructions, R911340667.
- Motion Logic System IndraMotion MLC Control hardware IndraControl L.
- HMI/Industrial PC Box PC IndraControl VPB.
- Cam Roller Guides, R310EN 2101 (2004-09).
- ML3 Self-Cooled Linear Motors Project Planning Manual, R911389760
- ML3 Self-Cooled Linear Motors Operation Instructions, R911389762

2 Linear Motion System overview

2.1 Introduction

This chapter gives the system designer the main specifications, and the maximum LMS configuration.

2.2 Main specifications

2.2.1 General

- Independent movement of up to 64 carriers.
- Speeds up to 2.5 m/s on MR sensor based tracks.
- Speeds up to 5 m/s on Hall sensor based tracks.
- Loads less than 1 kg to more than 1500 kg.
- Power range: from 100 W to 32 kW.
- Continuous force range from 10 N to 4000 N.
- Magnet plates.
  - Standard for operating temperatures up to 70 °C (NdFeB).
  - Vacuum compatible up to 10^{-8} mBar, temperature up to 120 °C (NdFeB).
  - Vacuum compatible up to 10^{-8} mBar, temperature up to 150 °C (SmCo).
- Sensor resolution
  - Position measurement with 5 µm resolution (Hall sensor).
  - Position measurement with 1 µm resolution (MR sensor).
- Absolute position accuracy per carrier
  - ±300µm (Hall sensor).
  - ±100µm (Hall sensor with CPA tables).
  - ±22µm (MR sensor).
- Position repeatability per carrier
  - ±20µm (Hall sensor).
  - ±5µm (MR sensor).
- Velocity ripple at a velocity of 0.02 m/s
  - ±5% (Hall sensor).
  - ±2% (Hall sensor with CPA tables).
  - ±1% (MR sensor).

2.2.2 LMS maximum system configuration

The NYCe 4000 LMS supports the following maximum number of components. Note that one LMS is defined as the Linear Motion System that runs on one PC. The LMS application can be executed on the PC or on a PLC.

Description	Maximum
Carriers in an LMS	64
Carriers in a track	64
Magnet plate length	1024 * pole pitch
Carrier length	min 192 mm (MR sensor) min 144 mm (Hall sensor) max 25 m carrier length must be a multiple of 24 mm
Tracks in an LMS	64
Coils in an LMS	164
Coils in a track	164
Coils controlled by one NY4074 with NY4120/10	4
Coils controlled by one NY4079 with DriveLink drives	4
Coils controlled by one NY4089 with DriveLink drives	8 (node frequency 1 kHz) 4 (node frequency 1 or 2 kHz)
Nodes daisy-chained connected	24
Nodes binairy-tree connected	62

Tab. 2-1: LMS maximum configuration specification

3 Hardware overview and specifications

3.1 Introduction

This chapter gives the system designer an overview of the necessary hardware components to develop an LMS. Major components are discussed in the following chapters.

- chapter 3.2 "Hardware overview" on page 7 gives an overview of the mechanical parts of an LMS.
- chapter 3.3 "Specifications LMS components" on page 12 gives the specifications of coils, carriers with magnet plate(s), and the supported LMS sensors.
- chapter 3.4 "Specifications control components" on page 16 describes the control components of an LMS. Control components are the system housings, MCU, drive module and SERCOS III Master module, a PC, and optionally a PLC.
- chapter 3.5 "Specifications electrical components" on page 18 describes the power supplies needed in an LMS.

3.2 Hardware overview

3.2.1 Mechanical construction

The mechanical construction of an LMS consists of one or more coils, sensors and a guiding system. The coils and sensors are mounted in the construction frame and the guiding system is also a part of the construction frame. On the guiding system one (or more) carriers can move freely. Magnet plates are mounted underneath each carrier.

Two types of sensors systems are available for the LMS, Hall sensors and MR sensors. Hall sensors use the magnetic field of the magnet plate to detect the position of the carrier. MR sensors use a magnetic scale attached to the carrier to detect the position of the carrier.

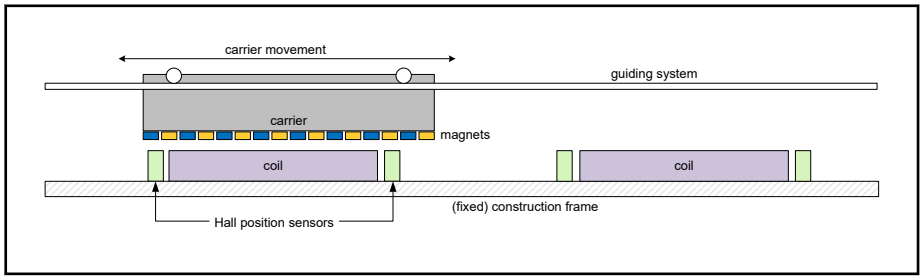

Fig. 3-1: Mechanical construction coil, carrier, magnets and Hall sensors

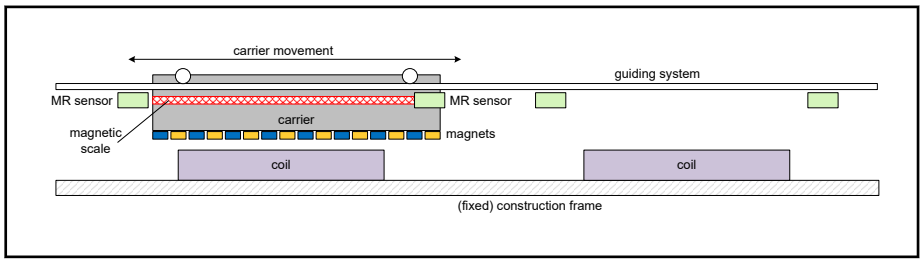

Fig. 3-2: Mechanical construction coil, carrier, magnets and MR sensors

3.2.2 Complete LMS including control components

One of the first steps in the design of an LMS is the drive size calculation. This drive size calculation determines the required coil type and drive type. The system designer needs to know the following parameters of the LMS.

- Weight (including the load) of the carrier.
- Size of the carrier.
- Air gap between the coils and the magnet plate.
- Estimated friction of the carrier on the guiding system.
- Maximum required acceleration and velocity of the carrier.
- Required position accuracy.
- Cycle time.

The following NYCe 4000 system housings are available for LMS.

Component name	Order number
NYS04.2-ST-02-LMSN-NY4074	R911378504
NYS04.1-ST-01-LMS-SERCOS-NY4079	R911378505
NYS04.1-ST-01-LMS-SERCOS-NY4089	R911420373

Tab. 3-1: NYCe 4000 system housings for LMS

System housing NY4074

The LMS control based on the NY4074 system housing consists of one MCU and one or two NY4120/10 drive modules. The NY4120/10 drive module can be used with maximum $75V_{DC}$ nominal servo drive voltage and a continuous current of $7A_{rms}$ per coil, and maximum peak current of $14A_{rms}$ per drive module. These restrictions may limit the maximum obtainable acceleration and velocity of the carrier(s). If the application requires higher accelerations or velocities, you must choose the DriveLink drive solution supported with the NY4079 system housing.

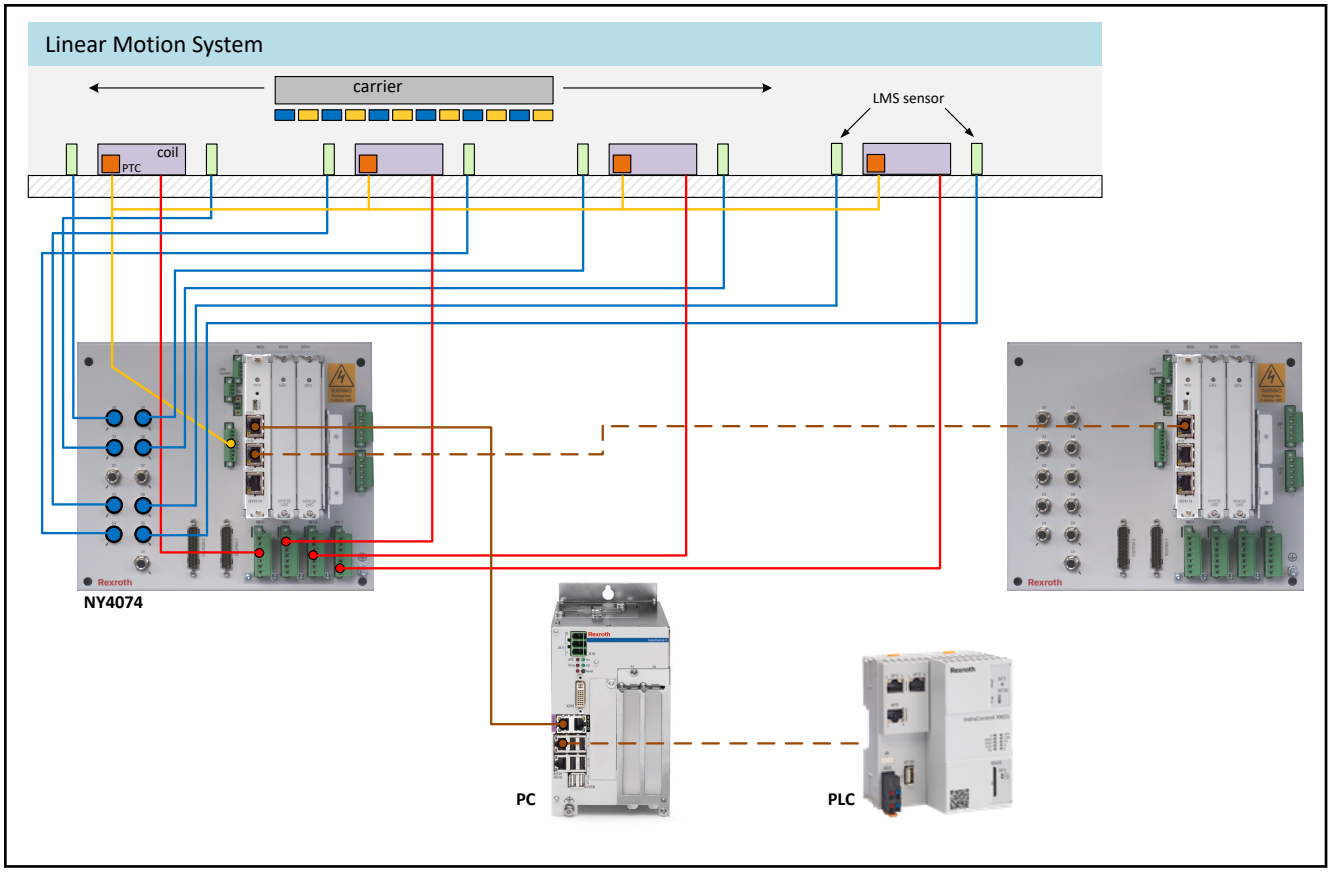

Fig. 3-3: NY4074 system overview with integrated drive modules

The electric wiring of 4 coils with their PTC and the associated sensors to the NY4074 system housing is shown in fig. 3-3 "NY4074 system overview with integrated drive modules" on page 9. Note that the connection of the PTC and its associated coil must be on the same drive module and axis. Further, the connection with a PC and an optional PLC is shown. The system housing with an MCU and drive modules is called a (NYCe 4000) node. With this configuration you can connect up to 4 coils.

System housing NY4079

The LMS control based on the NY4079 system housing consists of one MCU and one NY4150/10 SERCOS Master module. The NY4150/10 connects the DriveLink drive via the SERCOS network. The DriveLink drives are available for higher voltage and higher current ranges. The coil and PTC are connected to the DriveLink drive. No DC power supply is required for DriveLink drives, because DriveLink drives are directly connected to the mains power supply. See Rexroth IndraDrive Supply Units, Power Sections HMV, HMS, HMD, HCS02, HCS03 Project and Planning Manual.

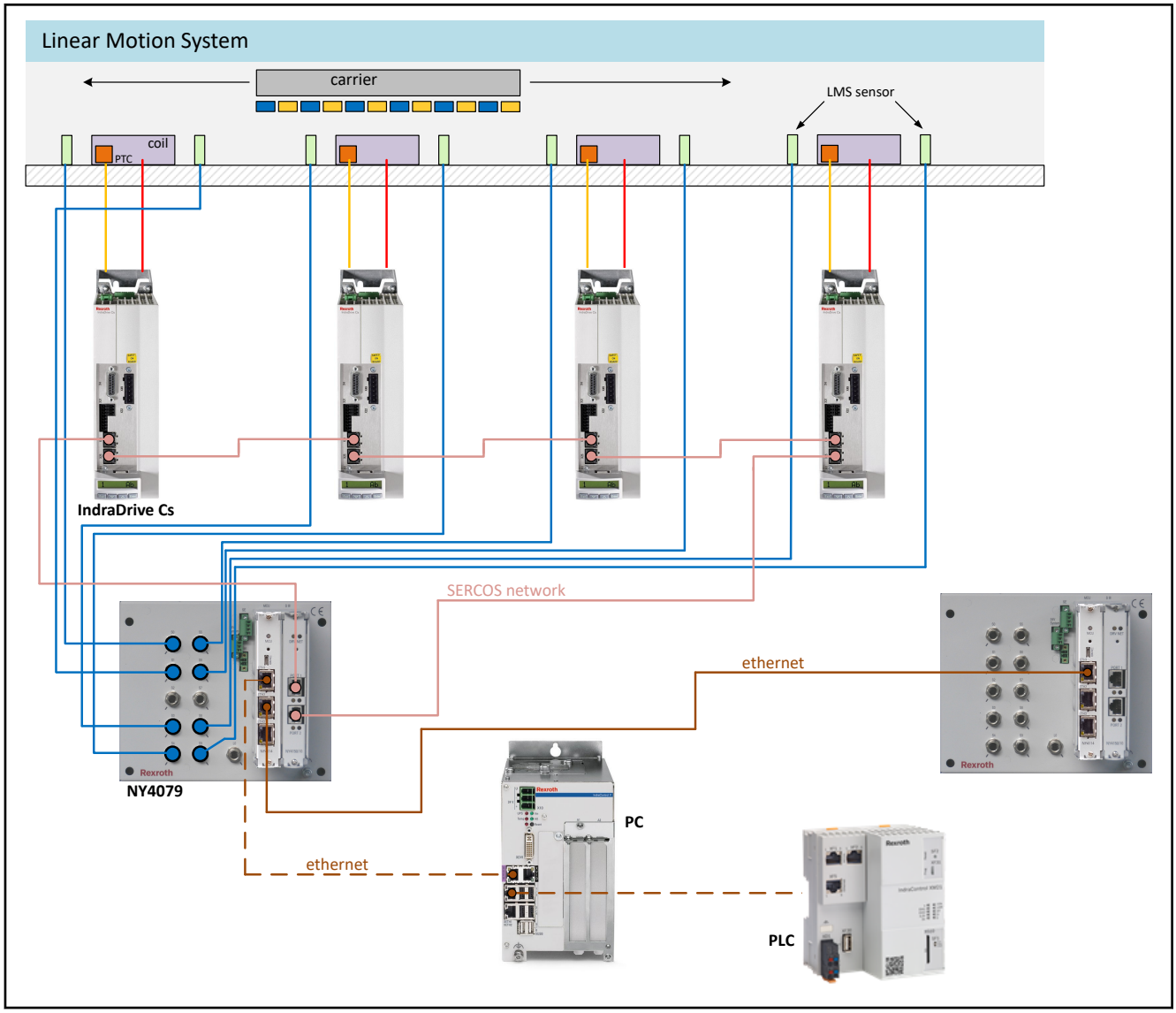

Fig. 3-4: NY4079 system overview with SERCOS network / DriveLink drives

The electric wiring of 4 coils with their PTC and the associated sensors to the DriveLink drives and the NY4079 system housing is shown in fig. 3-4 "NY4079 system overview with SERCOS network / DriveLink drives" on page 10. Further, the connection with a PC and an optional PLC is shown. The system housing with an MCU and SERCOS Master module is called a (NYCe 4000) node. With this configuration you can connect up to 4 DriveLink drives. The DriveLink drives are connected in a closed loop SERCOS network to the NY4150/10 SERCOS Master module.

System housing NY4089

The LMS control based on the NY4089 system housing consists of one MCU and one NY4150/10 SERCOS Master module. The NY4150/10 connects the DriveLink drive via the SERCOS network. The DriveLink drives are available for higher voltage and higher current ranges. The coil and PTC are connected to the DriveLink drive. No DC power supply is required for DriveLink drives, because DriveLink drives are directly connected to the

mains power supply. See Rexroth IndraDrive Supply Units, Power Sections HMV, HMS, HMD, HCS02, HCS03 Project and Planning Manual.

The LMS sensors are connected to the NY4961 Sensor box, material number R911422065, ordering code NYA04.1-LMS-SENSORBOX-NY4961. The NY4961 Sensor box is connected to the NY4089 system housing with one single cable, thus making wiring of the system simpler.

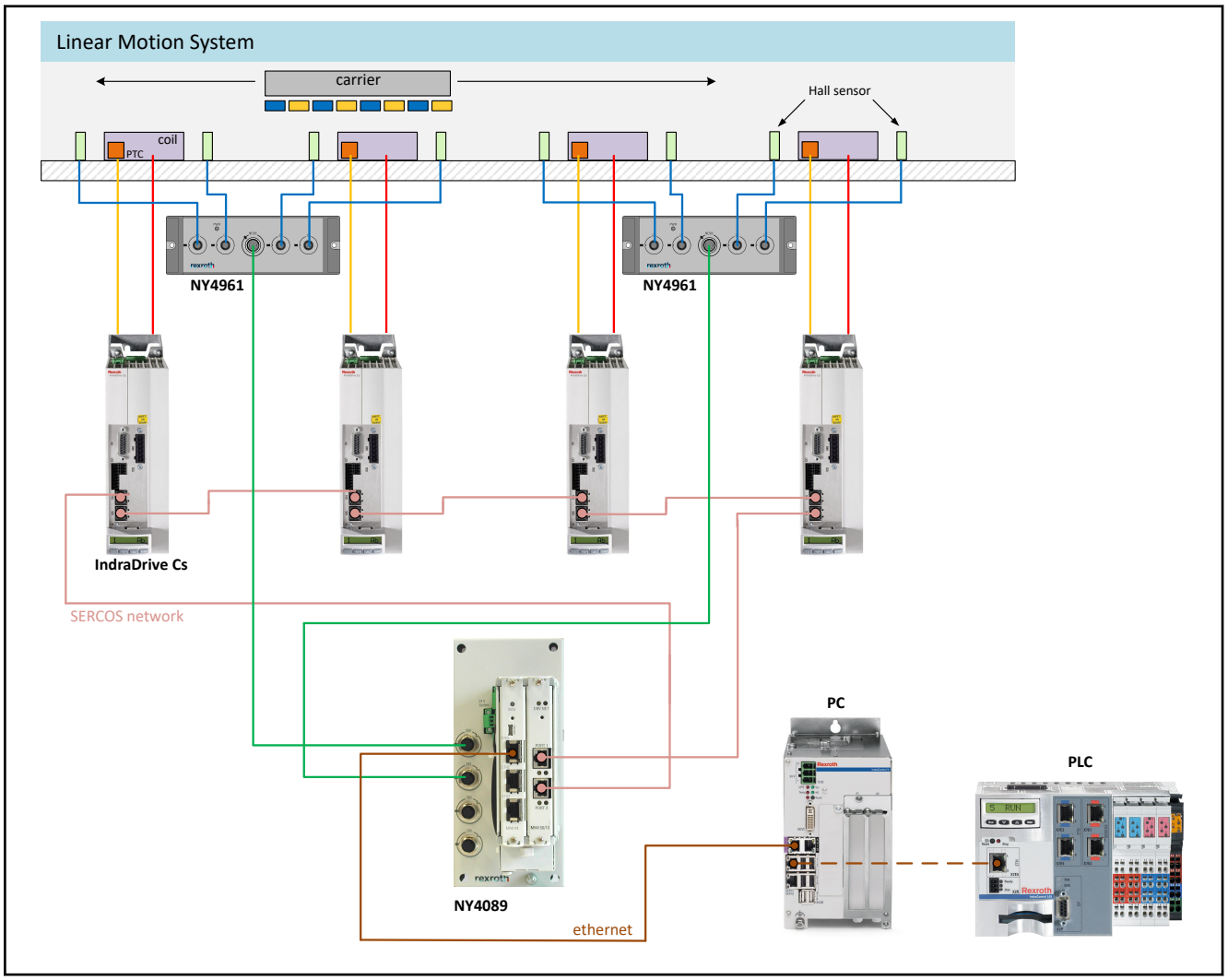

Fig. 3-5: NY4089 system overview with NY4961 Sensor box and SERCOS network / DriveLink drives

Note that 2 more NY4961 Sensor boxes, supporting up to 8 more sensors, can be connected to the NY4089, and the SERCOS network can be expanded with 4 additional DriveLink drives. This system configuration can support up to 8 axes, but only if the node frequency is 1 kHz. If the node frequency is 2 kHz, only up to 4 DriveLink drives and axes is supported.

The electric wiring of the coils with their PTC and the associated sensors to the DriveLink drives and the NY4089 system housing is shown in fig. 3-5 "NY4089 system overview with NY4961 Sensor box and SERCOS network / DriveLink drives" on page 11. Further, the connection with a PC and an optional PLC is shown. The system housing with an MCU and SERCOS Master module is called a (NYCe 4000) node. With this configuration you can

connect up to 4 DriveLink drives. The DriveLink drives are connected in a closed loop SERCOS network to the NY4150/10 SERCOS Master module.

3.3 Specifications LMS components

3.3.1 Coils

The coils are installed on the track at a mutual distance of the length of the magnet plate. This makes it possible to realize carrier movements along the track while maintaining a constant force. To this end, the movement of a carrier is decomposed in a number of movements "above" each of the coils.

The coils can be controlled by the NYCe 4000 system independently of each other. Multiple carriers can be moved along the same track, as long as there are no conflicts. In practice, this means that either each coil only moves one carrier, or it moves two carriers at the same velocity with a mutual distance which is a multiple (0, 1, ...) of the distance between two consecutive pairs of magnets. The generated control signal is based on the position sensor information of one of the two carriers only, which implies that a second carrier above the same coil moves along with the controlled carrier.

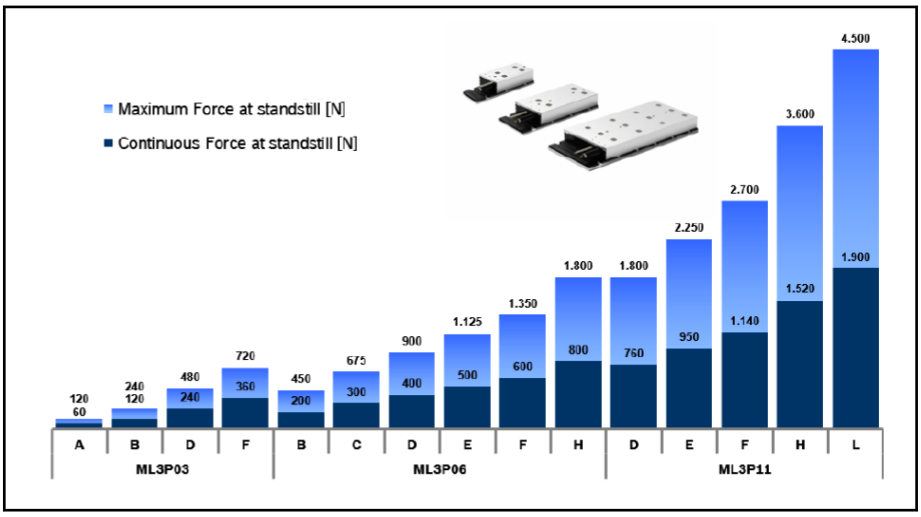

Fig. 3-6: Iron core coil force ranges (nominal air gap of 0.5 mm)

fig. 3-6 "Iron core coil force ranges (nominal air gap of 0.5 mm)" on page 12 shows the force ranges for the available iron core coils when a nominal air gap of 0.5 mm is applied. The available coils are described in the ML3 Self-Cooled Linear Motors Project Planning manual. When the air gap increases, the available drive force (continuous force) and the available attraction force decrease, see fig. 3-7 "Available drive and attraction force decrease with air gap increase" on page 13.

Air gap [mm]	0.5	1.0	1.5	2.0	2.5	3.0	3.5	4.0	4.5	5.0	5.5	6.0
Drive force [%]	100	85	73	63	54.5	47	41	35.5	31	27	24	21
Attraction force [%]	100	74	56	42	31	23	18	14	11	9	7.5	6.5

Tab. 3-2: Available drive and attraction force decrease with air gap increase

The mounting height must be determined and implemented correctly in the mechanical design to obtain the desired air gap. See chapter 4.8.7 "Magnet plate and coil mounting" on page 36 for the mounting height specifications related to air gap between coil and magnet plate. The component dimensions of coils and magnet plate should not be considered for determining the air gap.

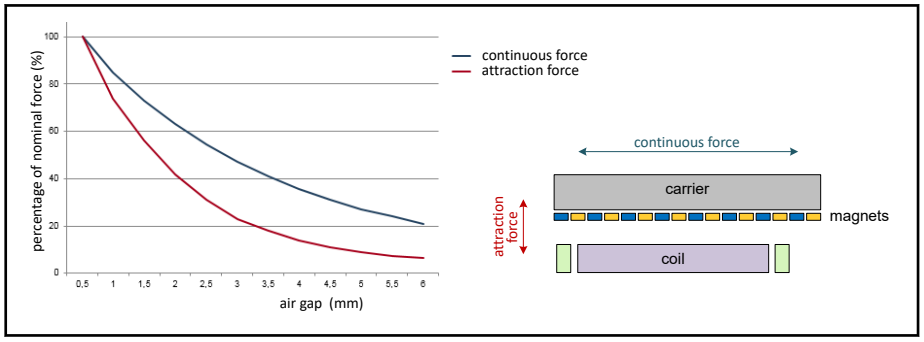

Fig. 3-7: Available drive and attraction force decrease with air gap increase

The nominal attraction force at 0.5 mm air gap per coil is much higher than the available drive force (see fig. 3-6 "Iron core coil force ranges (nominal air gap of 0.5 mm)" on page 12), but this force decreases more than the drive force when the air gap increases.

PTC sensor

Coils incorporate a PTC sensor. The PTC sensor is used to detect a too high temperature of the coil. An error mechanism in the LMS software allows a timely detection to protect the coil against overheating. Separate connections are available on the NY4074 system housing to connect the PTC sensors of the coils. When the LMS uses the NY4079 system housing, the PTC sensors are connected to the motor temperature evaluation inputs of the DriveLink drive.

Parallel coils

Coils can be wired in parallel in an LMS to generate more power. A maximum of 2 coils can be wired in parallel. Different types of coils can be wired in parallel, but both of the following constraints apply.

- Coils must have the same frame size of 03, 06, or 11
- Coils must have the same winding type

Two coil configurations are possible for parallel-wired coils.

Fig. 3-8: Parallel-wired coil configurations

☞ Different aspects must be considered for both configurations. If you consider the implementation of parallel-wired coils, always contact Bosch Rexroth.

☞ If coils are wired in parallel, make sure that the length of the connection cables is identical.

3.3.2 Carrier with magnet plates

The general function of the LMS is the movement of carriers from one position to an other position on a track or to an other track. The carriers have magnet plates (alternating north and south poles), mounted at the bottom or on a side of a carrier. The movement of a carrier is realized by controlling the coils, which are positioned in proximity of the magnet plates. The length of a carrier can be equal to or larger than the length of the magnet plate. The weight of the magnet plates is as follows.

- ML3S03 series magnet plates 2.85 kg/m
- ML3S06 series magnet plates 4.86 kg/m
- ML3S11 series magnet plates 13.5 kg/m

Standard magnet plates use NdFeB (Neodymium-Iron-Boron) magnets with a polymer coating. These magnet plates have a maximum operating temperature of 70 °C. Degradation of the magnet plate occurs at high temperatures. No problems are expected when the environmental temperature of the magnet plate is kept below 40 °C.

Two types of magnet plates are available for vacuum applications.

1. NdFeB magnets special treated during fabrication, without coating. These magnet plates have a maximum operating temperature of 120 °C.
2. SmCo (Samarium-Cobalt) magnets without coating. These magnet plates have a maximum operating temperature of 150 °C. SmCo magnets have a lower magnetic field strength than NdFeB magnets. The available force in drive direction is in general approximately 10% lower when using SmCo magnet plates.

See the ML3 Self-Cooled Linear Motors Project Planning manual and the ML3 Self-Cooled Linear Motors Operating Instructions for a comprehensive overview of all ML3 coils and magnet plates.

The maximum acceleration of carriers is not defined, because the maximum acceleration depends on the maximum available force, which is related to the coil types, see ML3 Self-Cooled Linear Motors Project Planning manual. The velocity range of the carriers is 0.02 m/s up to 5 m/s for a Hall sensor based track. The maximum velocity depends on the maximum node frequency, see NYCe 4000 LMS User Manual for more information. Furthermore, using the same node frequency, the maximum velocity with an MR sensor based track is half the velocity compared to a Hall sensor based track.

The carrier position is determined with Hall elements in the sensors on a Hall sensor based track. The Hall elements measure the magnetic field strengths of the magnet plates of the carrier. Therefore, the position accuracy mainly depends on mechanical tolerances and magnetic field strength imperfections of the magnet plates.

The carrier position is determined by sensors with Magneto-Resistive elements (MR) in the sensors on an MR sensor based track. The MR

elements measure the magnetic field direction of a dedicated magnetic scale attached to the carrier. Carrier positioning is more accurate with the MR sensor system than with the Hall sensor system.

3.3.3 Sensors

Two types of sensors for carrier positioning are available, Hall sensors and MR sensors. See NYCe 4000 Standard Housings & Accessories manual for detailed information of the LMS sensors.

Hall sensors

Each sensor contains a pair of Hall elements. The Hall elements measure the magnetic field strengths of the magnet plates of the carrier. The pair of Hall elements gives a sine and cosine signal. A sufficient accurate position is obtained using correction and interpolation. The Hall sensor signals are also used for commutation.

The position accuracy can be divided in 3 categories. The attainable position accuracy when the track is designed according to the mechanical design rules are given in the following table.

Absolute accuracy	+/-300 µm
Repeatable accuracy	+/-20 µm
Absolute accuracy with CPA	+/-100 µm

Tab. 3-3: Attainable position accuracy using Hall sensors

☞ Position accuracy is undefined in the curved sections of a track.

CPA is the abbreviation of Carrier Position Adjustment. Briefly explained, CPA compensates for inaccuracies due to imperfections in the magnet plate. The magnet plate of a carrier is once measured in a separate setup using a linear encoder with a high accuracy (order of magnitude ≤ 5 µm) and a NYCe 4000 STD node. The STD node must contain one drive module, which cannot be NY4120/10. Position data of the Hall sensor and linear encoder are processed and a carrier-based compensation table is generated by the CPA tool. See NYCe 4000 LMS Tools Manual for detailed information.

☞ Make sure that the selected encoder meets the mechanical tolerances of the track.

MR sensors

Each sensor contains a pair of magneto-resistive elements. With these elements the sensor measures the direction of magnetic fields. The sensor works in combination with a dedicated magnetic scale with poles at 5 mm distance. A sufficient accurate position is obtained using correction and interpolation. For commutation, the sensor signals and carrier position (when known by the system) is used. The position accuracy for MR sensors can be divided in 2 categories. The attainable position accuracy when the track is designed according to the mechanical design rules are given in the following table.

Absolute accuracy	+/-22 µm
Repeatable accuracy	+/-5 µm

Tab. 3-4: Attainable position accuracy using MR sensors

MR sensors cannot be used in the curve of a track.

Extension cables

All Hall sensors and MR sensors have a short cable with an M8 connector. Extension cables are available with a length of 0.6m, 1.0m, 1.5m, 2.0m, 3.0m, 4.0m, 5.0m and 9.0m. Their component names and order numbers can be found in the NYCe 4000 Standard Housings & Accessories manual.

Special cables are available for shared sensor connections between nodes (NY4074 or NY4079 system housing). These special cables have a male connector on both ends of the cable, and are also described in the NYCe 4000 Standard Housings & Accessories manual. If the distance between NY4074 or NY4079 system housings is too large for shared sensor cable, you can extend the length with a suitable sensor extension cable. See NYCe 4000 LMS User Manual for detailed information of the connection of LMS sensors.

Cable lenght:	< 1 m	1...9 m	9...18 m	> 18 m
Tolerance:	± 15 mm	± 45 mm	± 70 mm	± 110 mm

Tab. 3-5: M8 sensor cable tolerances

Maximum sensor cable length for both Hall sensors and MR sensors is 10 m.

3.4 Specifications control components

3.4.1 System housings

The system housings are the NY4074, NY4079, and NY4089, see chapter 3.2.2 "Complete LMS including control components" on page 8.

LMS sensors connect directly to the NY4074 and NY4079. In case of the NY4089 system housing, the LMS sensors connect to the NY4961 Sensor box. The Sensor box connects to the NY4089 with one single cable, thus making wiring of the system simpler.

A standard NYCe 4000 node with a standard drive module (NY4120, NY4130, or NY4140) is only required for CPA.

See NYCe 4000 Standard Housings & Accessories manual and NYCe 4000 Hardware System Manual for detailed information.

3.4.2 Motion Control Unit

The NYCe 4000 node consists of a system housing (NY4074, NY4079, or NY4089). The left-most slot in the module holder of the system housing is dedicated for the Motion Control Unit, MCU. The MCU type can be NY4114 (component name NYM04.1-MCU-ETHER-NY4114, order number R911173598) or NY4112 (component name NYM04.1-MCU-ETHER-NY4112, order number R911173007).

The NY4114 has 3 ethernet ports to connect to the PC and to connect to other MCUs. This way a daisy-chain configuration and a "binary tree" topology can be realized. The NY4114 supports so-called Embedded

Applications with the on-board Linux operating system. The NY4114 requires NYCe 4000 Software LMS Release 50V12 or higher.

The NY4112 has 2 ethernet ports to connect to the PC and to connect to other MCUs. This way a daisy-chain configuration can be realized. The NY4112 requires NYCe 4000 Software LMS Release 47VRS.

Both MCUs have control inputs called "service input" and "stop axes". See NYCe 4000 Hardware System Manual for more information.

3.4.3 Drive module

The NY4074 system housing supports up to 2 NY4120/10 PWM drive modules for LMS. Each drive module can control 2 LMS coils.

- NYM04.1-2PW-LMSN-NY4120/10, order number R911320447.

See NYCe 4000 Hardware System Manual for more information.

Regenerative energy

When working with PWM controlled drives such as the NY4120/10, energy will be regenerated when the motor is decelerated. When using large capacitors in the electrical network, this energy can be reused. In other cases some of the energy must be absorbed by an external system. A regenerative braking module stores the excessive electrical energy. This will prevent energy staying within the network. Energy staying within the network can cause a voltage increase which will (if large enough) lead to software errors and possibly the destruction of the NY4120/10 drive module. Some power supplies are not protected against current sinking, and in those cases the voltage increase will cause damage to the power supply.

You can use the NYA04.1-CAP-100V-NY4921 (order number R911325079) capacitor kit (one per drive module) to absorb the regenerative energy to some extent.

3.4.4 SERCOS III Master module

The NY4079 and NY4089 system housings support one NY4150/10 SERCOS III Master module. The NY4150/10 module has DriveLink connections based on the SERCOS III standard hardware to connect DriveLink drive amplifiers of Bosch Rexroth to the NYCe 4000 system.

- NYM04.1-SE3-MAST-NY4150/10, order number R911172782.

See NYCe 4000 Hardware System Manual for more information.

The compatible DriveLink drive amplifiers are IndraDrive Cs modules with Basic Control section, IndraDrive C with Basic Control sections CSB02.1A or CSB02.1B, and ctrlX DRIVE.

☞ The IndraDrive C is not supported for LMS coils.

The "Safe Torque Off" option is prefered for all DriveLink drives, see also chapter 6.3 "Electrical safety" on page 45. See NYCe 4000 Software Release Bulletin for the supported DriveLink drive firmware version. See Rexroth IndraDrive Cs Drive Systems with HCS01 Project Planning Manual and IndraDrive Control Sections CSB02, CSE02, CSH02, CDB02 Project and Planning Manual, for more information.

3.4.5 PC

The required software to commission the LMS and all NYCe 4000 tools (programs) run on the PC. The Carrier Management (CM) functions for application programs can also run on the PC. PC application programming languages are C, C++, C# (.NET environment), and Python. Optionally, you can use a PLC (in combination with a PC) to implement the application with a PLC. For more information about PLCs, see chapter 3.4.6 "PLC" on page 18.

To run the NYCe 4000 LMS Software and an application program, you need a PC that meets certain minimum requirements. See NYCe 4000 Software Release Bulletin, for minimum requirements, recommended configuration, network requirements, and supported operating systems. The available Bosch Rexroth PCs are the PR4 series and the VPB40.4. The PR4 has three main types PR41, PR42 and PR43 series, for specifications see IndraControl PR4 and VR4 Control Operating instructions, R911384699. For demanding LMS applications, the PR43 series is recommended, because it has the highest performance. The VPB40.4 is an INDRAMOTION MLC VP SET (a PC with a PLC incorporated)

☞ Specifications of the PC largely depend on application demands.

3.4.6 PLC

Bosch Rexroth has PLCs available, such as the MLC L45, MLC L65, and the XM21, XM22 and XM42 series. These PLCs support the Carrier Management functions. All PLC programming languages according to the IEC 61131-3 standard are supported on these PLCs.

Third-party PLCs with the IndraMotion software package can also execute all CM and CMC functions, but you must implement the socket communication layer (n4kcmsocketclient library) that interfaces to the CM and CMC Function Blocks at one side and interfaces to the supplied socket communication interfaces (of the PLC manufacturer) at the other side. See NYCe 4000 LMS Generic PLC Interface Manual for more information.

3.5 Specifications electrical components

3.5.1 Power supplies

The NYCe 4000 system needs a $24V_{DC}$ power supply. This "`24V SYSTEM`" power supply is connected to the MCU. The MCU generates on-board all other required power supply voltages for the modules and for the LMS sensors. Only the drive power supply voltage requires another separate power supply. Certain requirements apply for the `24V SYSTEM` power supply with respect to voltage tolerances, inrush current, and power supply cable.

Example of a power supply used for the `24V SYSTEM` for LMS applications is Bosch Rexroth VAP01.1H-W23-024-010-NN (order number R911171065).

If the LMS application uses the NY4074 system housing with NY4120/10 drive modules, additional power supplies are required for the drive power. The NY4120/10 can be used with drive power supply voltages in the range of 15V to $75V_{DC}$. See NYCe 4000 Hardware System Manual for detailed information of the drive power requirements of the NY4120/10.

Manufacturers of suitable drive power supplies are for example PULS, MGV, and MeanWell. See their data sheets for more information.

See NYCe 4000 Standard Housings & Accessories manual, chapter "Detailed Connection Information of Common Connectors" for connection and cable information. Further, installation and fire safety requirements can be found in the chapter "Installation, Earthing, Shielding, EMC, Electrical Connections".

☞ In applications using heavy carriers and high velocity profiles, carriers regenerate power to the power supply during deceleration. It is the responsibility of the system designer to choose suitable drive power supplies and connect NYCe 4000 nodes to different power supplies according to the installation requirements and fire safety requirements.

If DriveLink drive units are required for the LMS application, no additional drive power supplies for the drives are required. The DriveLink drive units have integrated power transformers and can be directly connected to the single phase or 3-phase AC mains power grid, depending on the type of DriveLink drive.

4 Hardware components selection

4.1 Introduction

This chapter discusses the design of an LMS track using the following flowchart.

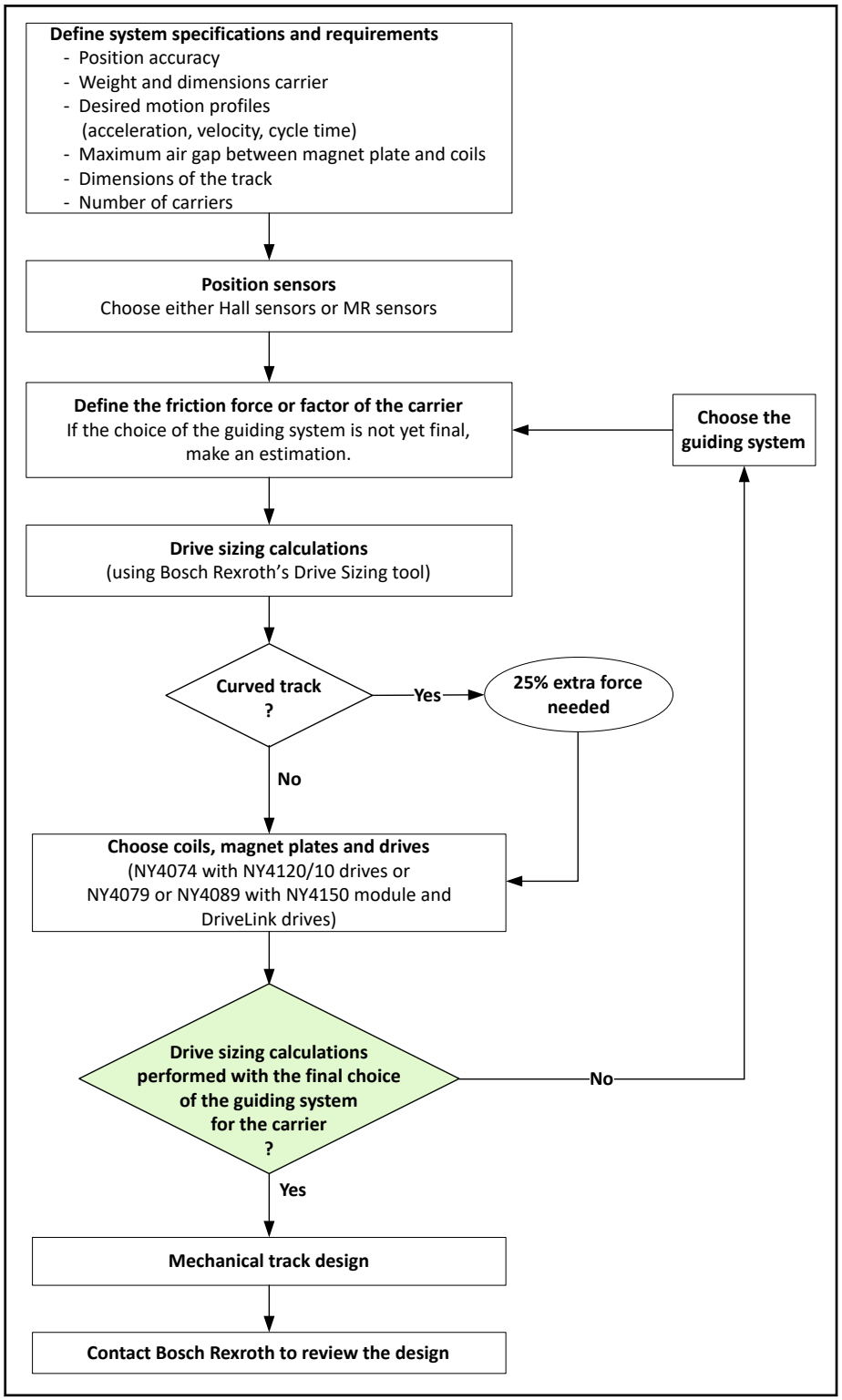

Fig. 4-1: Track design flowchart

4.2 System specifications and requirements

4.2.1 Introduction

The first step in the design process of an LMS is the definition of the main specifications. The following parameters must have been defined before the system designer can start the drive size calculations.

- Carrier dimensions and weight (including the payload and magnet plate)
- Desired motion profiles (accelerations, velocities and cycle time)
- Maximum air gap between the coil and the magnet plate of the carrier
- Friction force of the carrier or the friction factor (or at least an estimate)

The dimensions of the LMS track(s) and the number of carriers must also be known for a total design.

4.2.2 Position accuracy

The required absolute position accuracy needs to be known for a good choice of a sensor system and, if relevant for the application, also the repeatability per carrier and the velocity ripple need to be determined.

4.2.3 Carrier

The dimension of the carrier(s) depends on the application. Carrier lengths equal to or longer than the length of the magnet plate is possible. The weight of the carrier depends on the following.

- The size of the carrier and the materials.

☞ Note that the air gap between the coil and the magnet plate must be as constant as possible, while being exposed to the attraction forces between the coil and the magnet plates. A high stiffness of the mechanical carrier design is needed to meet this requirement.

- The product (what must be transported by the carrier).
- The weight of the magnet plates, see chapter 3.3.2 "Carrier with magnet plates" on page 14.
- The guidance rollers on the carrier.

It is important to know the environmental conditions for the choice of the magnet plates, such as vacuum or standard atmosphere and operating temperature. See chapter 3.3.2 "Carrier with magnet plates" on page 14.

☞ The length of a carrier must be a multiple of 24 mm if the carrier is used on an MR sensor based track.

4.2.4 Motion profile and airgap

The motion profiles of a carrier in combination with the air gap distance between the coil and the magnet plate determine the coil size and the required electric power from the drives. With increasing air gap distance the available force constant, back EMF constant and drive force (continuous

force and peak force) decrease according to fig. 3-7 "Available drive and attraction force decrease with air gap increase" on page 13. The weight of the carrier, maximum acceleration and friction force define the required drive force for the carrier and thus the maximum required drive current through the coils. The maximum velocity influences the maximum required servo drive voltage. The cycle time affects the heat development in the coils and the drives.

☞ An application may require (cover) material between the carriers and the coils. Materials with a low conductivity are preferred between the sensors / coils and the magnet plates in the track. No materials with a high conductivity (for example aluminum) are allowed within 10 mm from the magnet plate.

The supported material for cover plates above coils is "steel, 304 stainless" and "steel, 316 stainless". The specified performance may not be reached if different cover material is used.

4.2.5 Number of carriers and overall system layout

If the system designer has freedom of choice for the carrier length and thus the length of the magnet plate for each carrier, the LMS can be optimized, knowing the overall dimensions of the LMS and the number of carriers. The length of the magnet plate in relation to the number of coils (per length dimension) results in a specific distance between coils.

4.3 Friction force

Carriers are mounted on the fixed mechanical construction with a linear guiding system, such that the carriers have a degree of freedom in the drive direction. Ideally, the friction must be as low as possible, and the guiding system must be straight with as little interruptions as possible for optimal system performance. The airgap must be as constant as possible over the length of the LMS.

The friction force mainly depends on the guiding system.

☞ Friction also depends on the mass of the carrier and the attraction force.

The following factors must be considered when choosing a guiding system.

- The static and dynamic friction factors must be as low as possible.
- The maximum allowed travel speed and acceleration for the guiding system.
- The permissible operating temperature.
- Mechanical dimensions accuracy and bearing clearances.
- The maximum permissible force and moment loads in y- and z- direction (given that x-direction is the travel direction). Check with the life expectancy and static load safety factor calculations. These calculations take into account the weight of the carrier, attraction force between coils and magnet plates, optionally applied force and moment onto the carrier and the velocity of the carrier.
- Orientation of the carriers and whether the track is curved or straight.

For more detailed information of suitable Bosch Rexroth guiding systems, see R310EN 2101 (2004-09) Cam Roller Guides.

☞ Hepco's PRT2 Precision Track Systems series are dedicated for curved tracks. Hepco is therefore the recommended supplier for curved tracks.

☞ It is not recommended to use linear ball-rail guiding systems (runner blocks with ball chains). Due to alignment problems, the friction generally is too high.

4.4 Drive size calculations

A Drive Sizing tool is available from Bosch Rexroth that can be used to select the coil type, magnet plate type and the drives. Input information for the drive sizing calculations are the parameters described in the previous chapters. The flowchart fig. 4-1 "Track design flowchart" on page 21 gives a good overview of the design steps.

☞ Parallel wired coils are an option if single wired coils are not sufficient, see chapter 3.3.1 "Coils" on page 12 for more information.

☞ When SmCo magnet plates are required, keep in mind that the available force in drive direction is 10% lower.

4.5 Curved track geometry

4.5.1 Introduction

A curved track is for example used to build a closed track (without an end). The main design rules for an LMS track with curves are discussed in this chapter. Some specifications and limitations are discussed at the end of the chapter.

☞ MR sensors cannot be used in the curve of a track.

4.5.2 Curve radius

The radius of the curve is defined as the distance from the center of the curve to the middle of the magnet plate of the carrier.

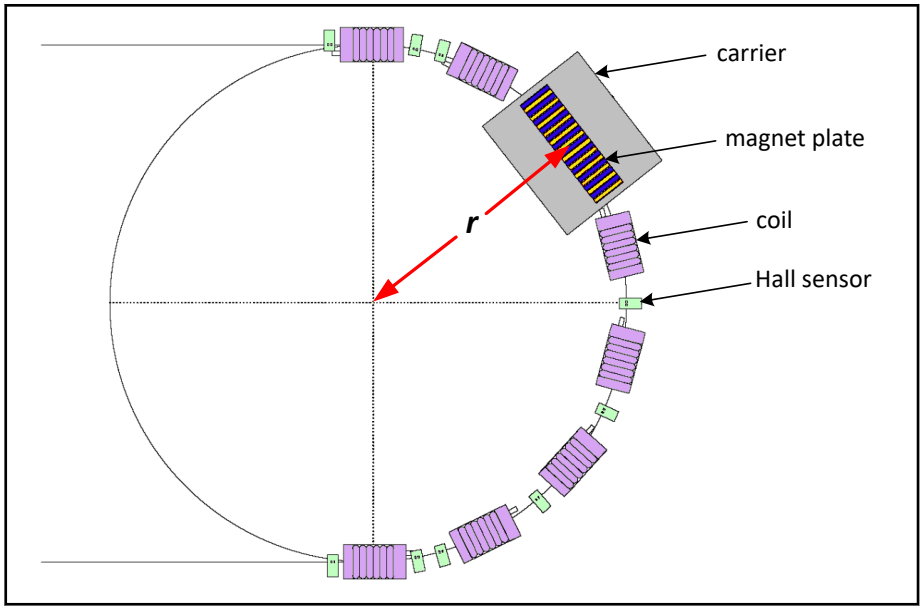

Fig. 4-2: Curved track with magnet plate

The minimum radius of the curve is defined as follows, where L_m is the length of the magnet plate, B_m is the width of the magnet plate, and R_{min} is the minimum radius of the curve.

$$\text{for } L_m < 7.87 * B_m \qquad R_{min} = 2 * L_m$$

$$\text{for } L_m \geq 7.87 * B_m \qquad R_{min} = \frac{L_m^2}{4 * B_m} + \frac{B_m}{4}$$

The commutation angle is optimized for only one carrier orientation with respect to the coil. The larger the angle between the carrier and the coil when the carrier moves through the curve, the less optimal the commutation angle becomes. The first equation is a restriction, due to commutation angle issues when the curve radius is too small. For larger carriers, with the same restriction on the minimum curve radius, the carrier moves out of the sensor detection range before the end of the magnet plate is reached, as shown in fig. 4-3 "Large carrier in a curve" on page 25.

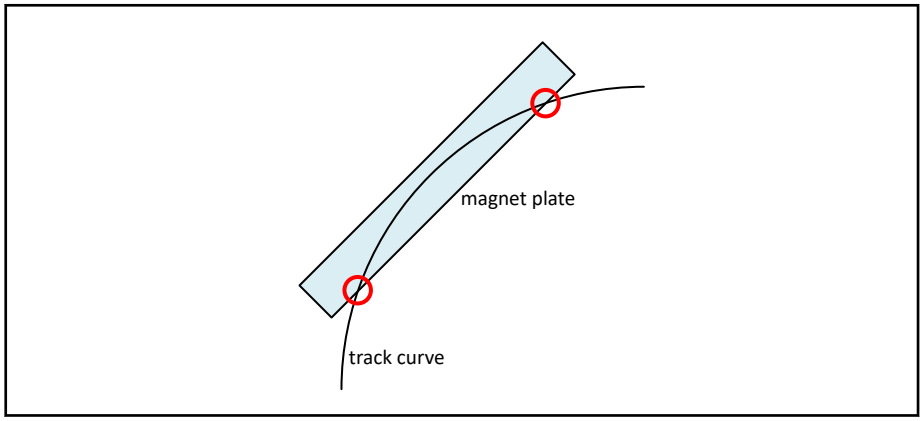

Fig. 4-3: Large carrier in a curve

If the carrier moves out of the sensor detection range before the end of the magnet plate is reached, the LMS software reports a "sensor inactive error"

every time the carrier moves through the curve at the moment the sensor is no longer detected. For that reason the second restriction applies for carriers with large magnet plates. The second restriction applies for the following magnet plates of the following length.

- ML3S03 series: L_m > 192 mm
- ML3S06 series: L_m > 384 mm
- ML3S11 series: L_m > 864 mm

4.5.3 Coil size

The maximum coil length that can be used in a curve is limited by the radius of the curve. A smaller radius results in a smaller coil length. The coil type for the curve can be selected from the following table.

Curve radius	ML3P03-A	ML3P03-B or ML3P06-B	ML3P06-C
r < 400 mm	✓		
r < 800 mm	✓	✓	
r > 800 mm	✓	✓	✓

Tab. 4-1: Coil types for a curve

4.5.4 Curved track specification

The force reduction in a curve depends on the radius of the curve. When the carrier is in between two coils the force reduction is the largest. For example, on a curved track with a carrier of 192 mm, a radius of 400 mm and ML3P06-B coils, a force reduction of 25% is measured in between the coils.

☞ The system designer must always be aware that the available force is reduced by 25% when using a curved track.

☞ The position accuracy of a carrier in a curve is undefined.

4.6 LMS component selection

4.6.1 Coils

The coils that are needed for the application is a result of the drive sizing calculations, see chapter 4.4 "Drive size calculations" on page 24.

Remarks

- If the application uses a straight track geometry, the minimum required margins are 10%.
- If the application uses a curved track geometry, the minimum required margins are 35%.
- As mentioned in the chapter 4.1 "Introduction" on page 21, in the paragraph "Carriers", 3 types of magnet material is available. If SmCo vacuum magnets are used, an **additional** 10% margin for drive currents and magnet forces is required.

4.6.2 Magnet plates

The magnet plate type is always in accordance with the coil type. The length of the carrier must be equal to or larger than the total magnet plate length. The total magnet plate per carrier can be realized with a single standard magnet plate or a combination of the magnet plates which have the same frame size, see ML3 Self-Cooled Linear Motors Project Planning manual and ML3 Self-Cooled Linear Motors Operating Instructions.

As mentioned in the chapter 4.1 "Introduction" on page 21, in the paragraph "Carriers", 3 types of magnet material is available.

4.6.3 NYCe 4000 node and drives

Introduction

A NYCe 4000 node consists of a system housing, an MCU, and drives. The drive type can be NYCe 4000 or DriveLink drive. Whether DriveLink drives are required is a result of the drive sizing calculations, see chapter 4.4 "Drive size calculations" on page 24. Depending on the type of drive, a specific NYCe 4000 node and configuration is used for LMS.

NYCe 4000 drives

The NY4074 system housing is used with NYCe 4000 drives. The NY4074 system housing contains the following components.

- NY4074 system housing
- MCU
- One or two NY4120/10 LMS drive module
- NY4921 Capacitor kit (per installed drive module)
- NY4922/10 fan unit

The standard available DC power supplies applicable for the NY4074 system housing have output voltages of $24V_{DC}$, $36V_{DC}$, $48V_{DC}$, or $72V_{DC}$. The maximum available continuous power is 960W. If more current or a higher drive voltage is needed, you can choose the NY4079 or NY4089 system housing with DriveLink drives.

DriveLink drives

The NY4079 and NY4089 system housing is used with DriveLink drive drives.

A system based on the NY4079 system housing contains the following components.

- NY4079 system housing
- MCU
- NY4150/10 SERCOS Master module
- NY4922/00 fan unit

A system based on the NY4089 system housing contains the following components.

- NY4089 system housing
- MCU
- NY4150/10 SERCOS Master module
- NY4922/00 fan unit
- NY4961 Sensor box

The coils are winded for a maximum voltage of 3-phase synchronous $480V_{AC}$ ($700V_{DC}$). See Rexroth IndraDrive Cs Drive Systems with HCS01 Project Planning Manual and Rexroth IndraDrive Supply Units, Power Sections HMV, HMS, HMD, HCS02, HCS03 Project and Planning Manual for more information.

4.6.4 Sensors

Two types of sensor systems are available for an LMS track, Hall sensors and MR sensors. The choice depends on the accuracy requirements, see chapter 3.3.3 "Sensors" on page 15 for the sensor specifications. The Hall sensors are less accurate than MR sensors. However, Hall sensors have the least demanding mounting tolerances and are more cost efficient. Therefore, in general, Hall sensors are the best choice if they meet the system accuracy requirements.

Hall sensors

The following versions of the Hall sensor are available.

Component name	Order number	Cable orientation
NYA04.1-LMS-HALLSENSOR-24-180-NY4980/00	R911173569	Straight
NYA04.1-LMS-HALLSENSOR-24-90-NY4980/10	R911173570	At 90 degrees angle

Tab. 4-2: Available Hall sensors

Both sensors have the same Hall-effect elements and both sensors generate the same output voltage when they detect the same magnetic field. The only difference between these two sensors is the cable connection. The cable connection is straight for the NY4980/00 sensor. The cable connection is at an angle of 90 degrees for the NY4980/10 sensor. The choice of cable orientation depends on the available mounting space in the LMS track.

MR sensors

Only one version of the MR sensor is available, NY4981. The MR sensor module operates in combination with the magnetic scale, NY4985.

☞ MR sensors cannot be used in the curve of a track.

Component name	Order number	Cable orientation
NYA04.1-LMS-MRSENSOR-180-NY4981/00	R911174592	Straight
NYA04.1-LMS-MAGNETSCALE-5-XXXX-NY4985 Magnetic scale with a customer-ordered length. XXXX specifies the length in [mm]. The range of XXXX is 150 .. 1000 mm in increments of 5 mm.	R91117yyyy	-

Tab. 4-3: Available MR sensor and magnetic scales

Extension cables

The cable attached to the Hall sensor and MR sensor has a length of 20 cm and an M8 male connector. Extension cables are available in several lengths, and one special cable is available for shared sensors between nodes (NY4074 or NY4079 system housing), see chapter 3.3.3 "Sensors" on page 15 for more information.

4.7 Guiding system

After the drive size calculations and LMS component selection, all the necessary data for the guiding system selection is available. For documentation of Bosch Rexroth guiding system, go to www.boschrexroth.com.

Keep in mind that additional to the weight of the carrier, there is an attraction force between magnet plate and coils. This attraction force may have a more significant effect than the weight of a small carrier.

When the rail of the guiding system is interrupted, for example when the LMS has an elevator or a ferry track, the friction will be significantly higher at this interruption (so more drive force is required here) and the position accuracy at this interruption is undefined.

If the friction force or factor turns out to be different from the initial estimation, perform the drive size calculation with the drive sizing tool again.

The total friction factor appears in general to be larger than specified by the guiding system supplier, because bearing blocks under the carrier can never be aligned perfectly with respect to each other. This misaligment causes additional friction.

Note that ball bearings in general cause a higher amount of friction.

4.8 Mechanical design rules

4.8.1 Guiding roller block alignment

The alignment of 4 guiding roller blocks under a carrier is in general very difficult. Also, especially for larger carriers, thermal effects may cause extra tension between the roller blocks on the separate rails. Therefore, a possible solution is using two roller blocks in line on one rail and apply a guiding system at the other side of the carrier with more degrees of freedom, see fig. 4-4 "Schematic example of an LMS guiding system" on page 29. If possible, from an alignment point of view, it would be better to use only one roller block and two roller wheels at the other side of the carrier.

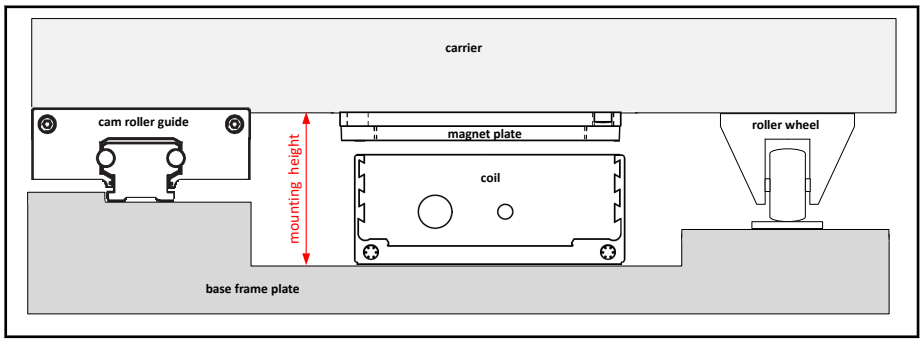

Fig. 4-4: Schematic example of an LMS guiding system

The example shows a flat surface to mount the roller blocks and the guiding rail. This flat surface may be helpful to accurately align the roller blocks and guiding rail. See the mounting instructions of the guiding system supplier for exact alignment requirements.

Each cam roller in cam roller guides has an adjustable eccentric roller to clamp the cam rollers over the rail. These eccentric rollers can be adjusted

from the top side of the roller blocks with a set screw and nut. See also the mounting instructions for cam roller guides in Profiled Rail Systems Instructions, R320103885/2016-09. Alignment of the cam roller blocks with the eccentric rollers is more convenient when the set screw and nut to adjust the eccentric rollers are accessible through the carrier or the roller block mounting plate on the carrier. Therefore, it is advised to make holes in the carrier or in the roller block mounting plate.

4.8.2 Coil placement

The definition of the distance between coils is the distance from coil center to coil center. The recommended distance between coils is exactly one magnet plate length, see fig. 4-5 "Available drive force and distance between coils" on page 30 situation ①. This distance minimizes the force ripple (velocity ripple) during movement of the carriers by minimizing the cogging forces, and this distance also simplifies the homing procedure.

Also, the force during movement from coil to coil is constant when the distance between the coils is kept equal to one magnet plate length, see the following figures.

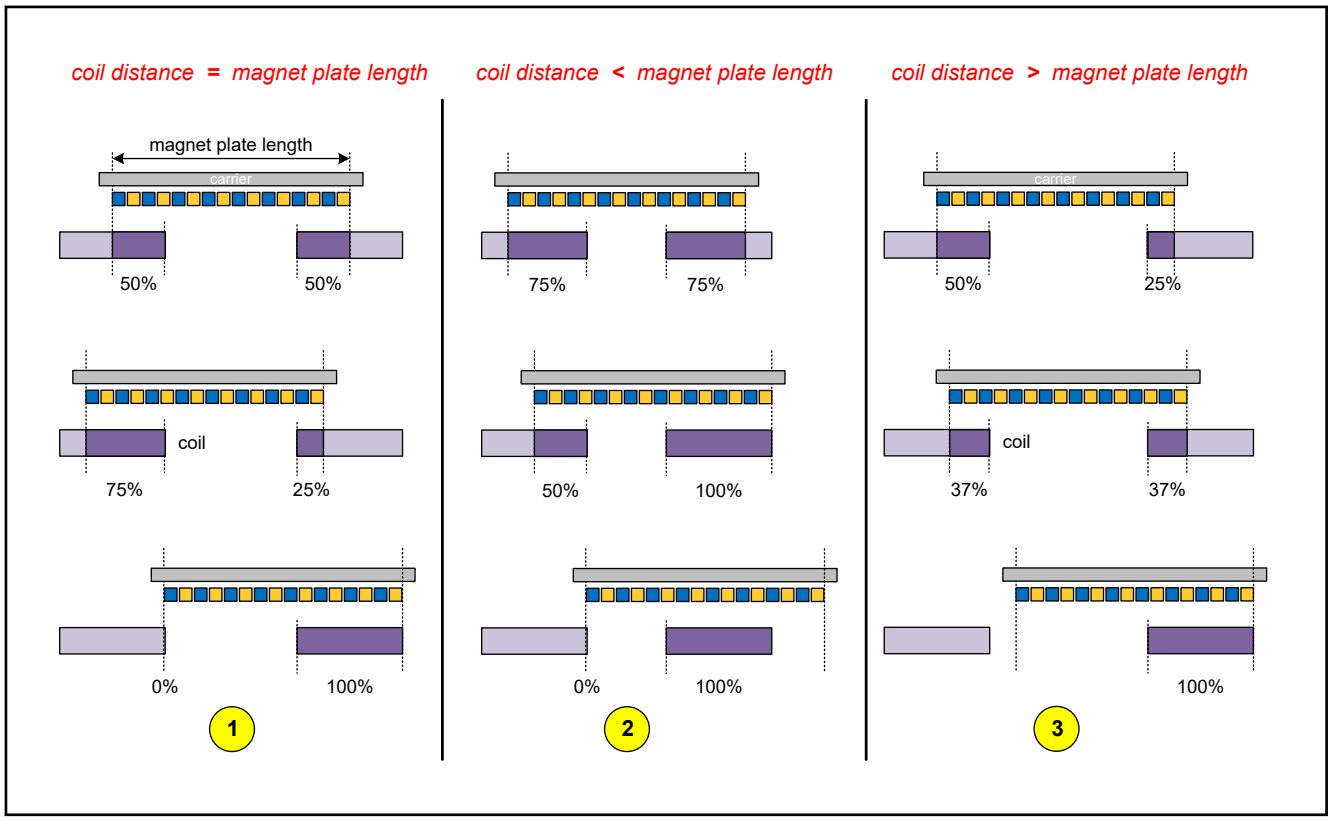

Fig. 4-5: Available drive force and distance between coils

Only in situation ①, when the distance between coils equals the length of the magnet plate, the drive force is constant.

If the system designer choses to place the coils at an other distance than the magnet plate length, the force disturbance due to cogging is always more than when the coils are placed at a distance equal to the magnet plate length. This is very important for applications in which position accuracy during the movement of the carrier is important. For distances deviating from the magnet plate length the force ripple due to cogging is minimized when the

distance between the coils is a multiple of 16 mm, which is the coil winding pole pitch. If the distance between coils is not exactly one magnet plate length (situation ② or ③), you must do the drive sizing calculations again. If the distance between coils is larger than the magnet plate length (situation ③), you must make sure that the overlap is at least in total 3 windings.

If the system designer choses to change the orientation of one of the coils by 180°, it is important to be aware of the following issues.

- The center of the active part of the coil is exactly in the middle in between the two dowel pin holes. Therefore, the distance between the coils is defined as in fig. 4-6 "Coil orientation vs distance between the coils" on page 31.

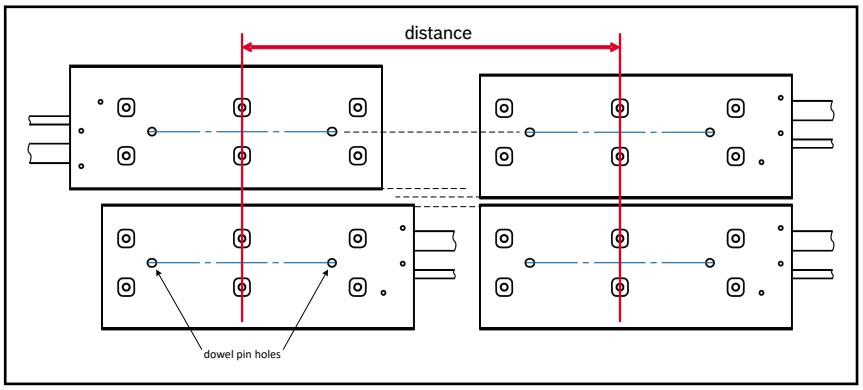

Fig. 4-6: Coil orientation vs distance between the coils

- The order of the connection of the windings of the coil is inverted. For example, if the windings of the coils in the initial orientation is U, V, W, the windings in the 180° rotated orientation is W, V, U. Therefore, the electric wires of the supply cable of the 180° rotated coil must be connected accordingly, or this rotation must be corrected in the software configuration.

4.8.3 Hall sensor

Different track layouts with respect to Hall sensor placement are possible for an LMS.

- 2 sensors per coil
- shared sensors between coils

Use a shared sensor if you want high-accuracy positioning of a carrier between 2 coils. A drawback of a shared-sensor configuration is that the distance between two coils must be smaller.

The following design specification must be met for the placement of the Hall sensors in the track.

- The minimum working distance between an end stop and the first (last) Hall sensor is 2 pole pairs (48 mm).
- The maximum sensor signal output is obtained with an air gap between the sensor and the magnet plate of 6.5 mm ±0.5 mm, see fig. 4-7 "Air gap between sensor and magnet plate" on page 32. The exact distance for maximum sensor signal output depends on the sensor and the magnet plate (variations in magnetic field strength). Therefore, for the exact optimized sensor signal output, fine tuning of the air gap is required. By optimizing the air gap, the position resolution is optimized. For applications in which the position resolution is not critical, the

recommended air gap is 8 to 10 mm (thus fine tuning the air gap would only consume time).

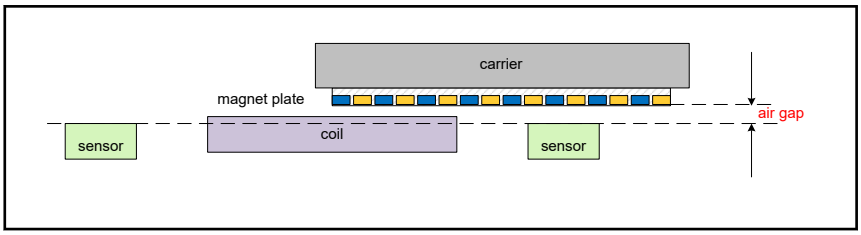

Fig. 4-7: Air gap between sensor and magnet plate

- Placement of the Hall center is realized using the center of the magnet plate and the center sensor location marker. The center sensor location marker must be within ±10 mm of the center of the magnet plate (red dashed line), see fig. 4-8 "Easy placement of the Hall sensor with respect to the magnet plate" on page 32.

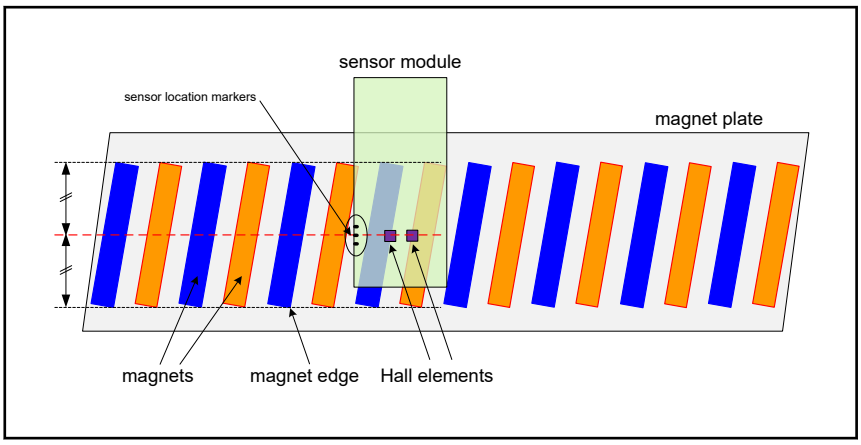

Fig. 4-8: Easy placement of the Hall sensor with respect to the magnet plate

---

☞ If you align the sensor with the coil, make sure that the minimum distance between the sensor elements and the magnet plate is observed. See NYCe 4000 Standard Housings & Accessories manual, chapter "NY4980 LMS sensor".

- The designer is free to choose the distance from sensor to coil.
- The minimum sensor overlap is defined as follows. When the carrier is centered above two sensors, the minimum sensor to magnet plate edge distance is 12 mm on both sides, see fig. 4-9 "Hall sensor - magnet plate overlap" on page 33.

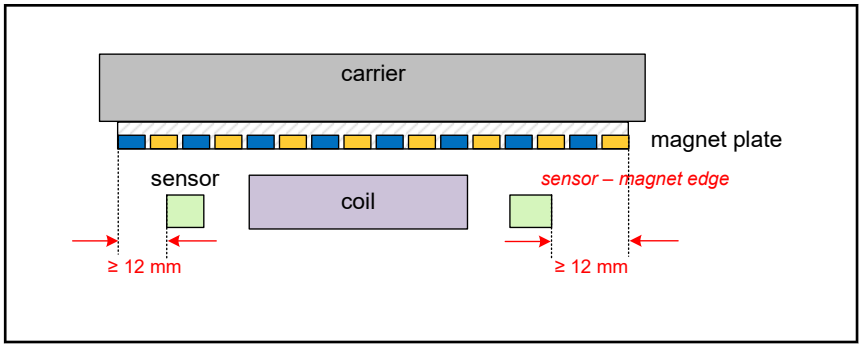

Fig. 4-9: Hall sensor - magnet plate overlap

If, for example for position accuracy between coils, the customer wants to use shared sensors (one sensor between two consecutive coils, shared by the consecutive coils), the sensor overlap still needs to be sufficient. Therefore, the coils must be placed closer to each other. If the coils must be placed closer to each other, that could imply that more coils are needed which will increase the cost. See chapter 4.8.2 "Coil placement" on page 30 for the mechanical design rules and the consequences on the performance of the system when placing coils closer to each other.

4.8.4 MR sensor and magnetic scale

See NYCe 4000 Standard Housings & Accessories manual for general MR sensor and magnetic scale mounting instructions and specifications.

The minimum sensor overlap is defined as follows. When the magnetic scale is centered above two sensors, the minimum sensor to magnetic scale edge distance is 15 mm on both sides, see fig. 4-10 "MR sensor - magnetic scale overlap" on page 33.

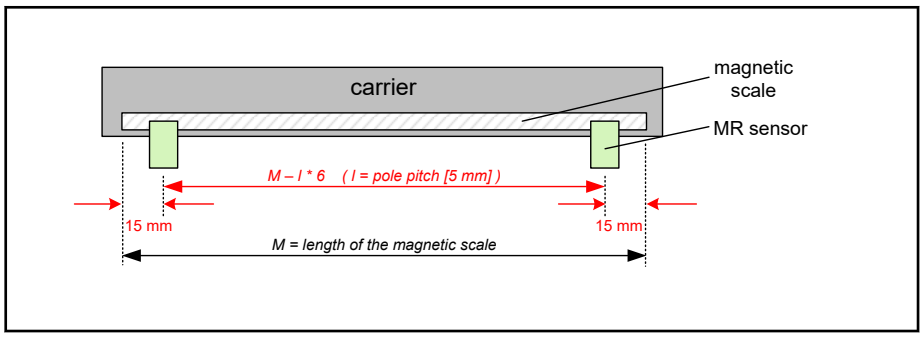

Fig. 4-10: MR sensor - magnetic scale overlap

☞ A commutation prologue is needed for the home procedure when MR sensors are used. To make sure that the commutation prologue is successful in all situations, the carrier length must be a multiple of 24 mm.

Positioning of the magnetic scale

The magnetic scale of **all** carriers in the LMS must be positioned such that all are within a span of 2 mm. The positioning of the magnetic scale of carrier D can never fit within a 2 mm span, compared to carriers A, B, and C.

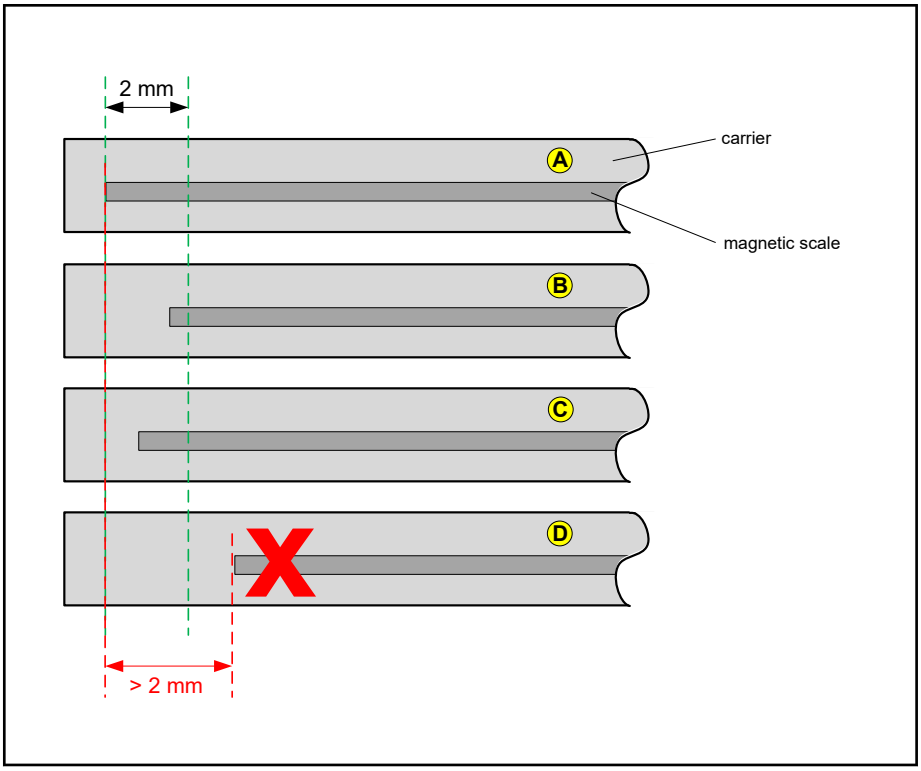

Fig. 4-11: Positioning of the magnetic scale on carriers in one LMS

The distance between magnetic scales of adjacent carriers must be at least 5 mm. The polarity of the first and last magnet is not relevant.

The minimum working distance between an end stop and the edge of the MR sensor element is 4 poles (20 mm).

The clear space distance between the magnetic scale and strong magnets, such as the edge of a magnet plate or motor coil, must be 50 mm or larger.

Minimum distance between 2 adjacent MR sensors

The MR sensor is only available with straight cable orientation. The minimum distance between 2 adjacent MR sensors depends on the minimum bending radius of the connection cable plus cable diameter. The minimum bending radius is 29.5 mm, the cable diameter is 5.8 mm.

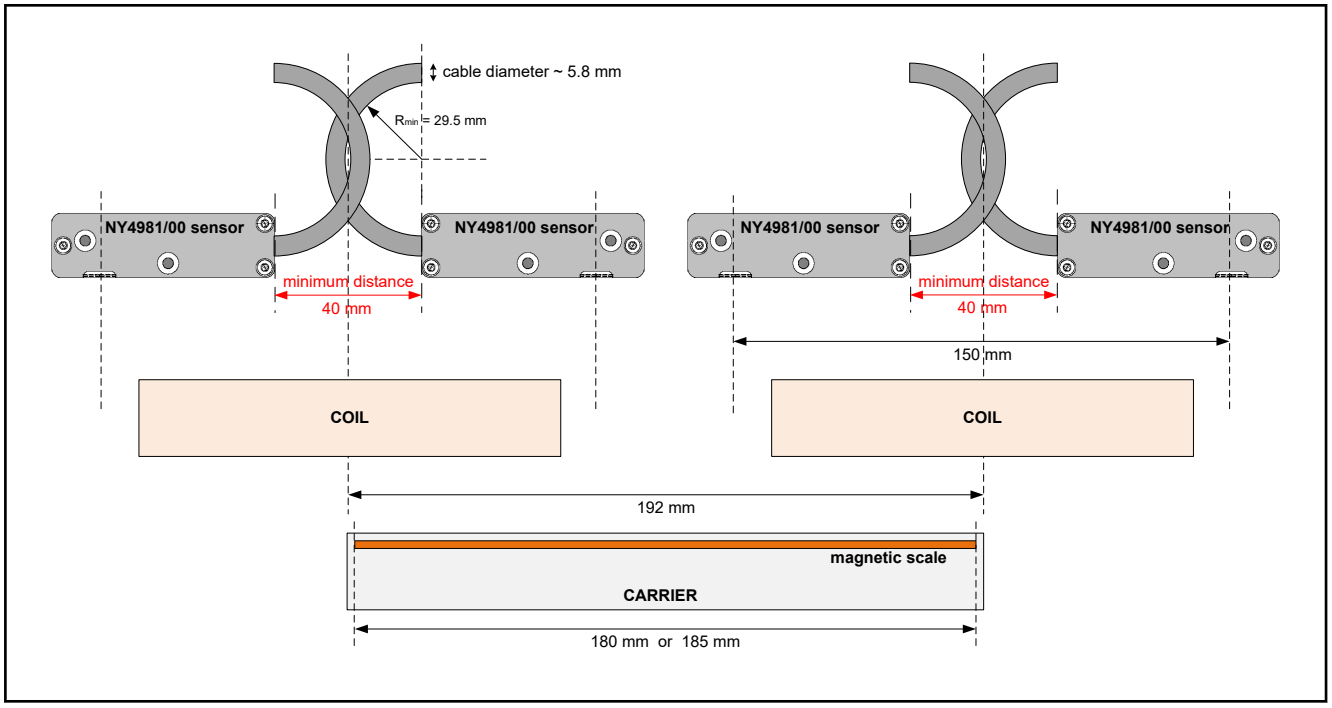

Fig. 4-12: Minimum distance between 2 adjacent opposite orientation mounted MR sensors

If 2 adjacent MR sensors are mounted with physically opposite orientation, the distance between 2 opposite orientation mounted sensors equals 29.5 + 5.8 + 29.5 + 5.8 = 70.6 mm where the connection cables do not overlap. However, some overlap of the connection cables is allowed, resulting in a minimum distance of 40 mm.

☞ If a straight track with MR sensors and a curved track (with Hall sensors) are combined, make sure that the first and last MR sensor of the straight track are positioned far enough from the curve. Otherwise, when the carrier moves from the straight track to the curved track, the correct detection of the magnetic scale by the MR sensor stops too early, which results in a software error that cannot be resolved. See chapter 4.5.2 "Curve radius" on page 24 for more information.

4.8.5 Curved track coil and sensor placement

Only Hall sensors can be used in a curved track. Coils are placed with "shared sensors" in a curve. Thus, between two coils there is only one sensor. It is not recommended to use two sensors between consecutive coils in case of a curved track.

All coils and sensors are positioned on the path of the curve. fig. 4-13 "Coil and sensor placement in a curved track" on page 36 shows an example how to position a coil along the curve. The red line is the tangent at the center of the coil. The coil is placed parallel to this tangent line. This positioning is done for all coils and sensors along the curve. The tangent (red line) must be through the center of the coil.

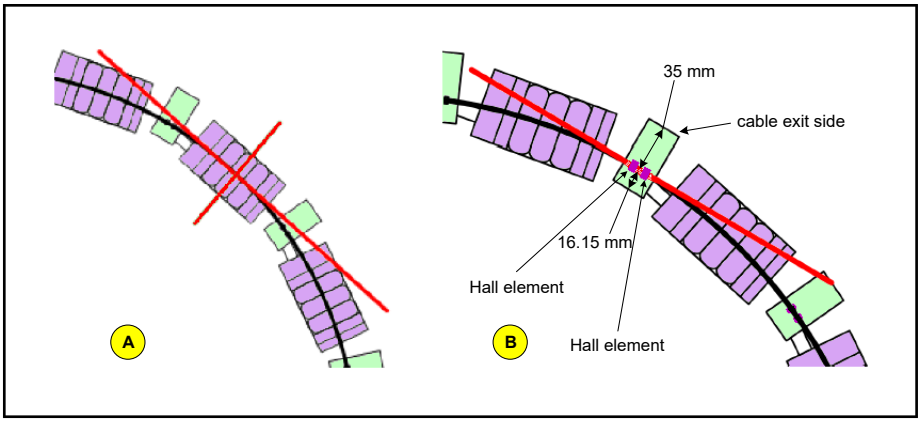

Fig. 4-13: Coil and sensor placement in a curved track

The tangent (red line) must cross the Hall elements of the sensor. This implies that 35 mm of the sensor must be on the outer side of the curve and 16 mm of the sensor must be on the inner side of the curve, assuming that the cable exit is at the outer side.

The distance between sensors along the arc line, center to center, must not be larger than the length of the magnet plate minus 24 mm.

$$d_{sensors\text{-}max} < L_{magnet\ plate} - 24\ mm$$

☞ Position accuracy is undefined in the curved sections of a track

4.8.6 Carrier design

To maintain a constant air gap between the magnet plate and the sensors and between the magnet plate and the coils, it is important to design the carrier with sufficient stiffness. This stiffness is also required to obtain a high natural frequency. Further, the magnet plate must be well-aligned with the track so that the air gap is as constant as possible at any location of the magnet plate.

The length of the carrier must be equal to or larger than the length of the magnet plate. Only one commutation angle per coil can be applied, that is why the distance between magnet plates must always be a multiple of the pole pitch of the magnet plate, above one coil. If adjacent carriers must be able to move above the same coil with a constant distance between them, the difference in length between the carrier and the magnet plate must be a multiple of the pole pitch.

☞ The length of a carrier must be a multiple of 24 mm if the carrier is used on an MR sensor based track.

4.8.7 Magnet plate and coil mounting

All magnet plates have a dowel pin hole and a slotted hole for a dowel pin for accurate positioning of the magnet plate.

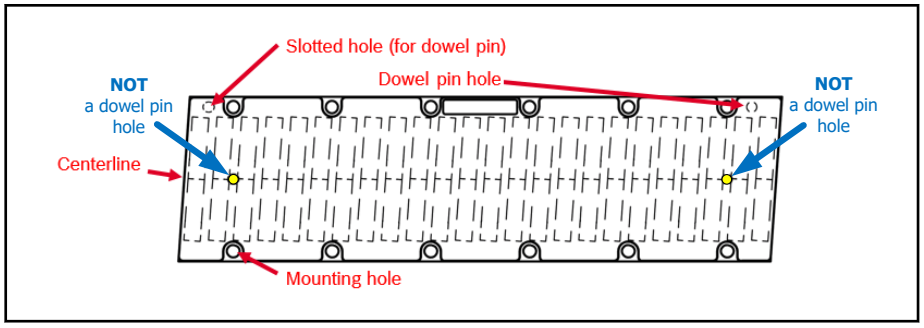

Fig. 4-14: Magnet plate layout

☞ The holes in the middle of the magnet plates (see centerline in fig. 4-14 "Magnet plate layout" on page 37) are **not** dowel pin holes. These holes are only used during the production of the magnet plates and must **not** be used for positioning of the magnet plates under a carrier. The dowel pin holes are not on the centerline, because that way the orientation of the magnet plates is assured.

Consecutive magnet plates are positioned correctly with respect to each other when the magnet plates are positioned using the dowel pins. This way the distance between the magnets is constant, also at the transition of two consecutive magnet plates. Furthermore, the magnet plates are correctly positioned and aligned with respect to the coils.

The magnet plate can be mounted with the bolts in the mounting holes after the magnet plate has been accurately positioned using the dowel pins. See ML3 Self-Cooled Linear Motors Project Planning manual, chapter 5 "Dimension sheets" for dimensions of the magnet plates and the holes.

All coils have one dowel pin hole and one slotted hole for a dowel pin for accurate positioning.

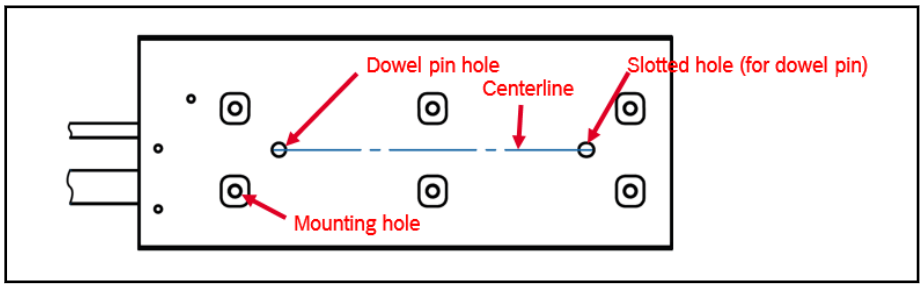

Fig. 4-15: Coil mount layout

The coil can be mounted with the M4 mounting holes after accurate positioning of the coil in the track using the dowel pins. See ML3 Self-Cooled Linear Motors Project Planning manual, chapter 5 "Dimension sheets" for dimensions of the coils and the holes.

The center line of the magnet plates (dashed blue line) must be aligned with the center line of the coils (dashed red line). See fig. 4-16 "Coil and magnet plate alignment" on page 38. Note that the magnetic center line of the coil is **not** the mechanical center line of the coil. The dowel pin hole in the coil indicates the center of the active part of the coil.

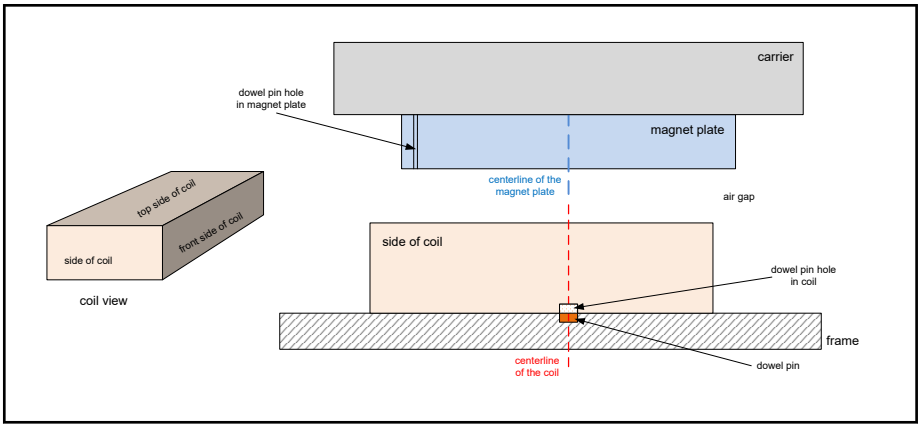

Fig. 4-16: Coil and magnet plate alignment

Magnet plates have 2 holes in the back plate in the middle of the magnet plate on the imaginary center line for alignment, see fig. 4-14 "Magnet plate layout" on page 37.

Coils have a dowel pin hole and a slotted hole for a dowel pin in the middle of the active part of the coil on the imaginary center line, see fig. 4-15 "Coil mount layout" on page 37.

When using the iron core motor it is important to read the design drawings in the intended way. When looking at the distance between the coil and the magnet plate (air gap), it is not the air gap directly that is specified but the total distance between the mounting surface of the coil and the mounting surface of the magnet plate. This distance is called the mounting height, see also fig. 4-4 "Schematic example of an LMS guiding system" on page 29.

The mounting height in the mechanical drawings of the ML3 Self-Cooled Linear Motors Project Planning manual result in an effective air gap of 0.5 mm. The drive force efficiency is 100% in case of 0.5 mm air gap. As an example, see fig. 4-17 "Coil dimensions and tolerances" on page 38, the mechanical drawing taken from the ML3 Self-Cooled Linear Motors Project Planning manual with mounting height of an ML3P06 coil and magnet plate combination.

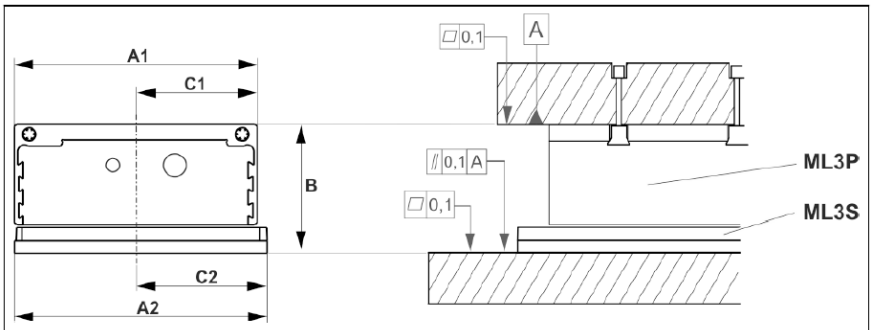

Frame size	Installation height B	Motor axis distance		Width	
		C1*	C2*	ML3P A1*	ML3S A2*
03	40 mm ± 0.1 mm	23 mm	25 mm	51 mm	50 mm
06	40 mm ± 0.1 mm	36 mm	40 mm	77 mm	80 mm
11	45 mm ± 0.1 mm	60.5 mm	65 mm	125.5 mm	130 mm

Fig. 4-17: Coil dimensions and tolerances

If, for example, an air gap of 1.0 mm is desired using ML3P03 coils and magnet plates, the mounting height must be 40.5 mm. See the following table for an overview of the mounting heights per motor type and air gap.

Intended Air gap (Top motor to magnet plate)(mm)	0,5	1	1,5	2	2,5	3	3,5	4	4,5	5	5,5	6	6,5	7
Mounting Height(mm) (±0,1) for ML3P03	40	40,5	41	41,5	42	42,5	43	43,5	44	44,5	45	45,5	46	46,7
Mounting Height(mm) (±0,1) for ML3P06	40	40,5	41	41,5	42	42,5	43	43,5	44	44,5	45	45,5	46	46,7
Mounting Height(mm) (±0,1) for ML3P11-D/E/F/H/L	45	45,5	46	46,5	47	47,5	48	48,5	49	49,5	50	50,5	51	51,5
Mounting Height(mm) (±0,1) for ML3P11-R	47	47,5	48	48,5	49	49,5	50	50,5	51	51,5	52	52,5	53	53,5

Fig. 4-18: Mounting height for motor types and desired air gap

4.8.8 Track stiffness

It is important to have a sufficient stiff frame for the tuning of the feedback controller of the position loop during commissioning. If the frame has sufficient stiffness, the first natural frequency is relatively high.

☞ Given that the weight of the frame is at least 5 times the weight of the carrier, the first natural frequency of the frame in X-direction is specified to be at least 80 Hz.

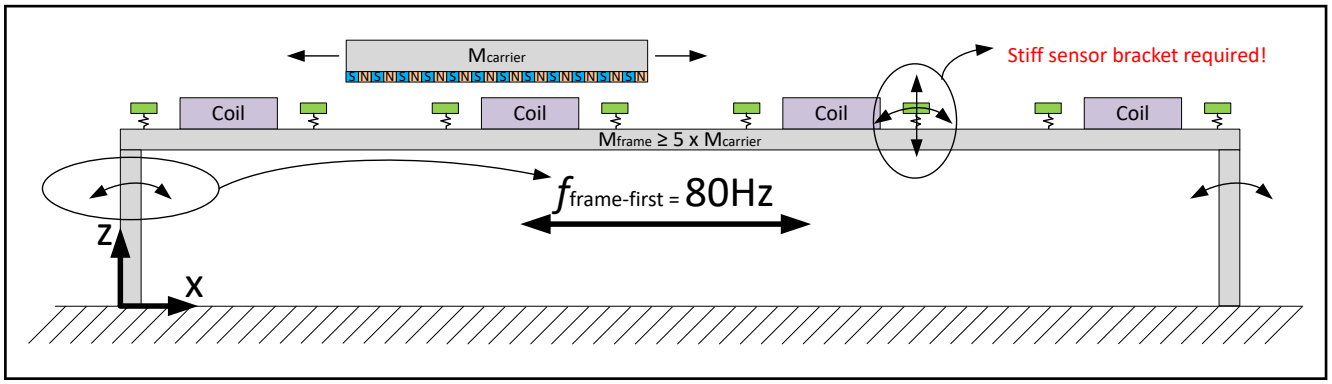

Fig. 4-19: Dynamic model of an LMS

If the first natural frequency of the system is high enough, the feedback controller can be tuned robustly with little effort.

The figure shows that the sensor brackets also have a certain stiffness. Make sure that the stiffness of the sensor brackets is such that the first natural frequency is much higher than the first natural frequency of the frame.

5 Electrical implementation

5.1 Introduction

This chapter provides some guidelines for the electrical wiring of an LMS.

Wiring schemes of an LMS with NYCe 4000 drives and with DriveLink drives can be seen in chapter 3.2.2 "Complete LMS including control components" on page 8 (power supplies excluded). See NYCe 4000 Standard Housings & Accessories manual for connection information.

5.2 Wiring shielding and grounding

5.2.1 Introduction

Make sure that you have read the chapter "Installation, Earthing, Shielding, EMC, Electrical Connections" in the Standard Housings & Accessories manual for correct implementation of each component (system housing, power supply, etc.). The chapters chapter 5.2.2 "Wiring and shielding" on page 41 and chapter 5.2.3 "Grounding" on page 43 provide some background information.

5.2.2 Wiring and shielding

Every wire can be regarded as the combination of a resistor, an inductance (coil) and a capacitance. When a wire transfers signals with varying voltage (for example data signals and PWM signals in motor power cables), the wire emits electro-magnetic radiation. Also, unshielded cables act like an antenna, that is, they pick up electro-magnetic disturbances from the environment. It is important to use cables that do not disturb other cables and are not sensitive for disturbances coming from other cables. For these reasons, it is recommended to use braided shielded cables for cables that transfer high power electricity (motor power cables and power supply cables).

The cable attached to LMS sensors and the available sensor extension cables are shielded.

It is strongly recommended to use Cat-5e or better S-FTP (shielded / foiled twisted pair) cables for network cables. SF-UTP (shielded-foiled unshielded twisted pair) cables are also supported, but S-FTP cables are better. See fig. 5-1 "Network cable types (source: www.laborelec.com)" on page 42 for the different types of network cable.

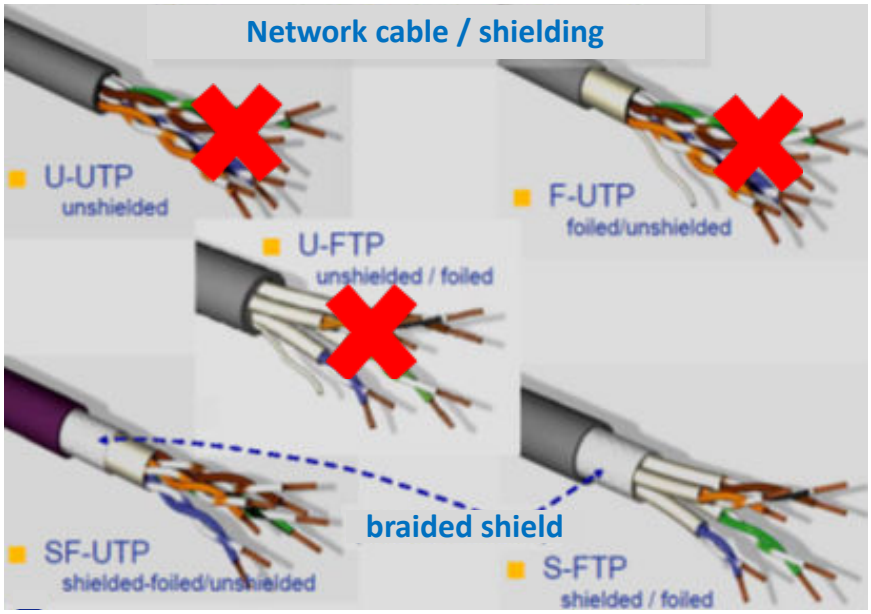

Fig. 5-1: Network cable types (source: www.laborelec.com)

It is mandatory to use industrial quality RJ45 connectors on the network cables. Using less robust connectors may cause communication problems in the system.

Power cables and data cables must be separated at all times to avoid cross-talk between the cables. Different cables are preferably placed in separate steel cable trays. The following table gives a small overview of distances between cables.

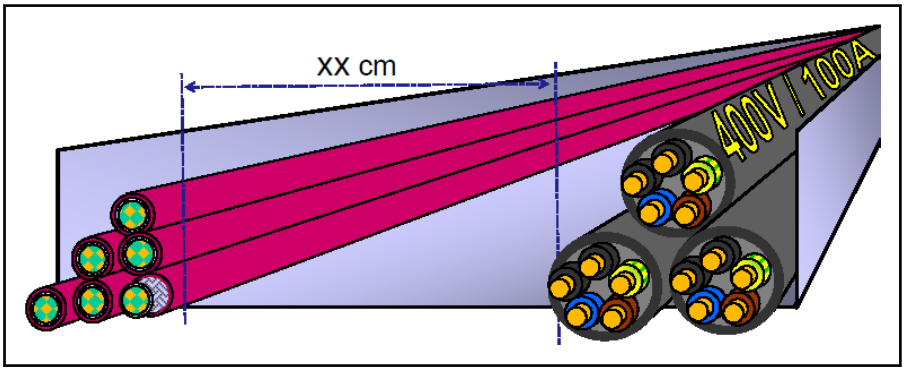

Fig. 5-2: Distance between data cables and power cables (source: www.laborelec.com)

Cable type	Cable type	Distance without partitioning	Distance with aluminum partitioning	Distance with steel partitioning
Unshielded power cable	Unshielded data cable	200 mm	100 mm	50 mm
Unshielded power cable	Shielded data cable	50 mm	20 mm	5 mm

Shielded power cable	Unshielded data cable	30 mm	10 mm	2 mm
Shielded power cable	Shielded data cable	2 mm	1 mm	0.5 mm

Tab. 5-1: Distances between cable types with or without partitioning

5.2.3 Grounding

Proper grounding connections must be taken care of when implementing the electrical design. The machine frame is the ground reference. Each node must be connected to the machine frame with an as short as possible grounding wire. If the machine consists of multiple frames, the frames must be properly connected with each other using a braid wire. See for more information NYCe 4000 Standard Housing & Accessories manual, chapter "Installation, Earthing, Shielding, EMC, Electrical Connections".

6 Safety

6.1 Introduction

Every installation must include safety devices and constructional provisions to avoid any possible personal injury. You must implement mechanical and electrical safety measures for an LMS. This chapter only introduces some examples. Note that one specific safety measure can never be a reason to omit other safety measures.

Some examples of safety measures are given in this chapter. However, the shown safety measures are not a complete implementation of a machine-wide safety system. These examples are given as a start of the design a machine-wide safety system.

6.2 Mechanical safety

Carriers move along the track with a high velocity and large masses. This makes mechanical safety measures necessary.

Every carrier on an LMS track can start a movement at any given moment in time. The velocity of the carrier can be high. A track with carriers must be covered with a certified protective cover to avoid accidental contact with moving carriers. The doors to the LMS system must contain safety switches that are triggered when a door is opened. These safety switches are connected to the emergency stop circuit, as shown in fig. 6-1 "NYCe 4000 safety circuit with emergency stop button" on page 46.

If an LMS track has a physical end, provisions must be installed to avoid that a carrier can move off the track. A proper designed mechanical end stop must be installed at any end of an LMS track to avoid mechanical damage or possible personal injury in case carrier control might fail.

6.3 Electrical safety

Electrical safety measures in general switch off the power supplies of a system. One or more "emergency stop" push buttons must be placed at visible and accessible locations on or near the machine.

In case of an LMS, electrical power is needed to stop carrier movements in an error situation. Therefore, a "safety timer relay" must be implemented in the emergency stop safety circuit. There is a difference between systems using the NY4120/10 drive modules and systems using DriveLink drives to power the coils.

NYCe 4000 axes

NYCe 4000 has a so-called "stop_axes" input. If an active signal is applied on this input and the application software has configured this feature, any moving carrier will immediately execute a so-called quick-stop profile.

The safety timer relay has two outputs, one to the NYCe 4000 stop_axis input and one to a double implemented (redundant) "cut power" relay on the mains power connection of the Drive Voltage power supply. When the emergency button is pressed, the stop_axis input immediately receives an active signal, and after some time delay of the safety timer relay the mains power to the Drive Voltage power supply is switched off. These measures ensure that the system has power to brake the carriers when an emergency situation occurs.

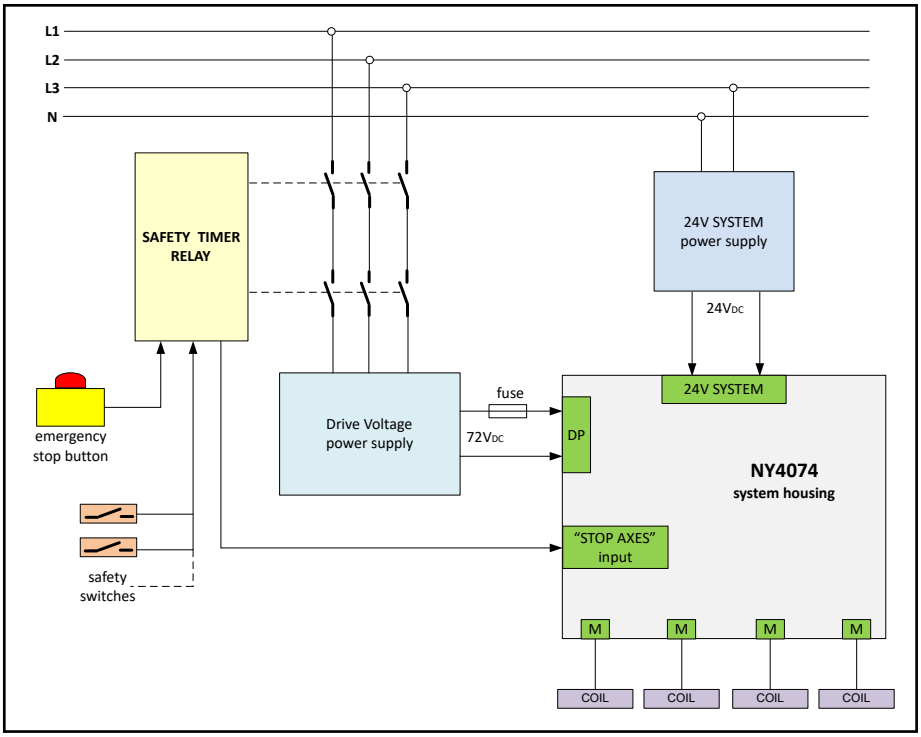

Fig. 6-1: NYCe 4000 safety circuit with emergency stop button

DriveLink drive axes

If the DriveLink drive modules are equiped with the "Safe Torque Off" (STO) function, only a certified emergency stop button is needed. STO replaces the double implemented (redundant) "cut power" relay on the mains power.

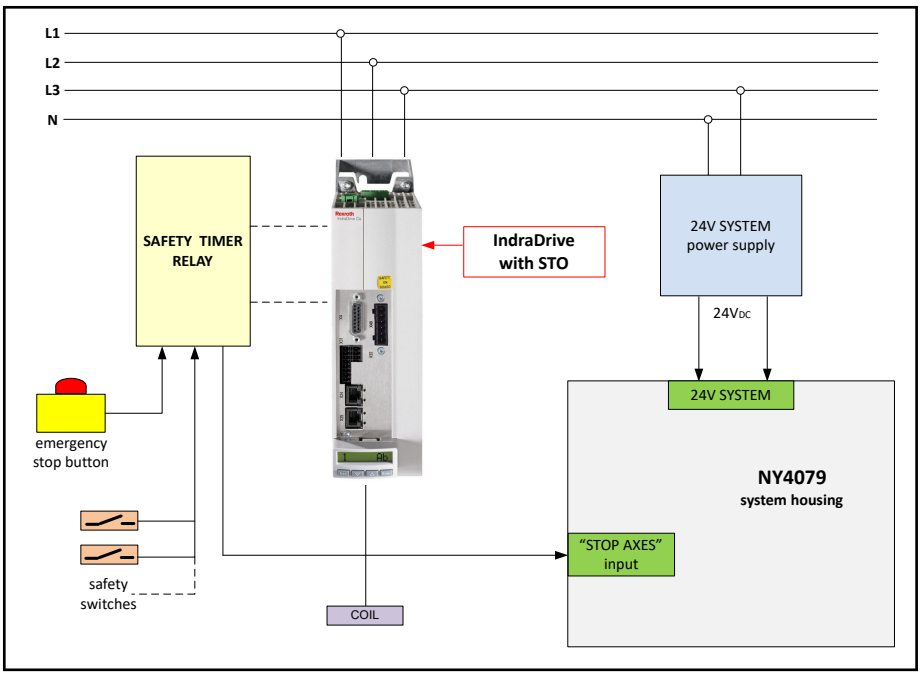

Fig. 6-2: IndraDrive Cs (with STO) safety circuit with emergency stop button

Notes

Bosch Rexroth AG
Bgm.-Dr.-Nebel-Str. 2
97816 Lohr a.Main
Germany
Tel. +49 9352 18 0
Fax +49 9352 18 8400
www.boschrexroth.com/electrics

R911386072

DOK-NY4000-LMS*DESIGN*-PR12-EN-E