rexroth
A Bosch Company

Ball screw assemblies - JIS series

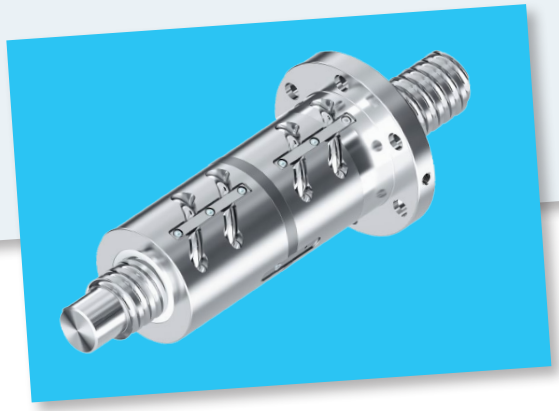

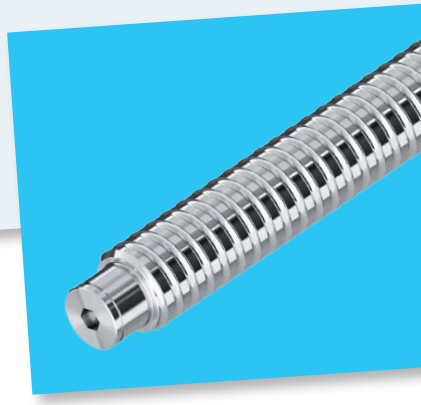

www.boschrexroth.com

Ball screw assemblies BASA

Ball screw assemblies are the efficient solution for the precise conversion of rotary to linear motion. Building on our many years of experience and extensive engineering expertise, we have developed a product range that fulfills the most diverse requirements. No matter whether you need very high linear speeds, maximum load ratings, or minimum installed length, you will always find the right solution in Rexroth's broad manufacturing spectrum. To make sure your application runs with the utmost accuracy and operational reliability, the individual components in our range have been precisely matched to one another, so complete assemblies can be put together efficiently.

More detailed information from page 6 onwards

Characteristic features

- **A really varied range,** suitable for virtually any requirements
- Absolutely **uniform** and **stable functioning**
- **Especially smooth operation** due to optimal ball pick-up and recirculation
- **High load rating** due to large number of balls
- **Short nut length**
- **Easy installation** of the nuts, mounting orientation individually specified
- Extensive range comprising various series
- Matching supplementary individual components such as nut housings and end bearings, also as pillow block units, partly prepared for the installation of suitable motor flanges

Notes

General notes

- Non-horizontal installation
  There is no self-locking effect due to the low level of friction between the screw and the nut.
  The components of the product are designed to last for the product's service life; a major defect may nonetheless arise in exceptional cases, and if the moving part (i.e. the screw assembly nut) is not installed horizontally it may fall off. An additional protection against falling loads is therefore required for non-horizontal installation.

Intended use

- Rexroth screw assemblies are components that are used to convert a rotary motion into a linear motion, and vice versa. Rexroth screw assemblies are intended exclusively for use in machines for moving and positioning.
- The product is intended exclusively for professional use and not for private use.
- Use for the intended purpose also includes the requirement that users must have read and understood the related documentation completely, in particular the “Safety Instructions.”

Misuse

Use of the product in any other way than as described under “Intended use” is considered to be misuse and is therefore not permitted. If unsuitable products are installed or used in safety-relevant applications, this may lead to uncontrolled operating statuses in the application which can cause personal injury and/or damage to property.
The product may only be used in safety-relevant applications if this use has been expressly specified and permitted in the product documentation.
Bosch Rexroth AG will not accept any liability for injury or damage caused by misuse of the product. The risks associated with any misuse of the product shall be borne by the user alone.
Misuse of the product includes:

- transporting people

General safety instructions

- The safety rules and regulations of the country in which the product is used must be complied with.
- All current and applicable accident prevention and environmental regulations must be adhered to.
- The product may only be used when it is in technically perfect condition.
- The technical data and environmental conditions stated in the product documentation must be complied with.
- The product must not be put into service until it has been verified that the final product (for example a machine or system) into which the product has been installed complies with the country-specific requirements, safety regulations and standards for the application.
- Rexroth screw assemblies may not be used in zones with potentially explosive atmospheres as defined in the ATEX directive 94/9/EC.
- Rexroth screw assemblies must never be altered or modified. The user may only perform the work described in the "Quick user guide" or the "Mounting instructions for screw assemblies."
- The product must never be disassembled.
- At high travel speeds a certain amount of noise is caused by the product. If necessary, appropriate measures should be taken to protect hearing.
- Special safety requirements for specific sectors (e.g. cranes, theaters, foodstuffs) as provided for in laws, directives and standards must be complied with.
- The following standards must be complied with: JIS 1192

Directives and standards

Rexroth screw assemblies are suitable for dynamic linear applications that are moved and positioned reliably and precisely. The machine tool industry and other sectors must observe a series of standards and directives. These requirements can vary significantly worldwide. It is therefore essential to understand the legislation and standards that apply in each particular region.

DIN EN ISO 12100

This standard is entitled Safety of machinery – General principles for design – Risk assessment and risk reduction. It gives a general overview and contains a guide to the major developments governing machines and their intended use.

Directive 2006/42/EC

This European Machinery Directive describes the basic health and safety requirements
for the design and manufacture of machinery. The manufacturer of a machine or his authorized representative has a duty to ensure that a risk assessment has been performed in order to determine the health and safety requirements which have to be fulfilled for that machine. The machine must be designed and built with the results of the risk assessment in mind.

Directive 2001/95/EC

This directive covers general safety requirements for any product placed on the market and intended for consumers, or likely to be used by consumers under reasonably foreseeable conditions, including products that are made available to consumers in the context of service provision for use by them.

Directive 1999/34/EC

This directive concerns liability for defective products and applies to industrially manufactured movables, irrespective of whether they have been incorporated into another movable or into an immovable or not.

REGULATION (EC) No. 1907/2006 (REACH)

This regulation relates to restrictions on the marketing and use of certain dangerous substances and preparations. “Substances” means chemical elements and their compounds as they occur in the natural state or as produced by industry. “Preparations” are mixtures, compounds or solutions consisting of two or more substances.

Table of contents: Ball screw assemblies

Table of contents **5**

Product overview **6**
Nuts and Nut Housings 6
Screws 7

Product overview **7**
Bearing 8
Accessories 9
Definition of ball screw assembly 10
Sample applications 11

Sample applications **11**

Inquiries and orders **12**
Inquiries and orders 12

Inquiries and orders **14**
Identification system for short product names BASA 14
/ ordering data 14

Inquiries and orders **15**
Overview nut types 17

Nuts **17**
Single nut with flange and interal single recirculation FEI-E-D 18
Single nut with flange and external recirculation FEE-E-D 20
Single cylindrical nut with internal recirculation ZEI-E-D 22
Single nut with flange and end - deflector FEA-E-D 24
Double nut with flange and internal single recirculation FDI-E-D 26
Double nut with flange and external recirculation FDE-E-D 28
Double cylindrical nut with internal recirculation ZDI-E-D 30
Double nut with flange and end-deflector FDA-E-D 32

Screws **34**
Precision screw 34

Screw ends **36**
Overview of screw ends 36
Abbreviations 37

Accessories **50**
Overview 50
Pillow block unit SES-F assembly, steel 52
Pillow block unit SES-L assembly, steel 54
Pillow block unit SEB-F assembly 56
Pillow block unit SEB-L assembly 58
Flange bearing assembly SEE-F-Z 60
Bearing assembly LAF 62
Bearing assembly LAN 64
Bearing assembly LAD 66
Bearing assembly LAS 68
Slotted Nuts NMA and NMZ for fixed bearings 70

Technical data **72**
Technical notes 72
Acceptance Conditions and Tolerance Grades 74
Ball screw assemblies runout and perpendicular tolerance 76
Preload and rigidity 78
Preload and rigidity of single nuts 80
Preload and rigidity of double nuts 82
Installation tolerances 84
Lubrication 85

Calculation and examples **86**
Calculation 86
Critical speed 90
Permissible axial load on screw F_c (buckling load) 92

End Bearings **96**
Design notes, installation 96
Mounting the housing 97
Lubrication of the end bearings 98
Calculation 99

Design calculation service form **101**

Nuts and Nut Housings

Standard series		Page
Single nut with flange and internal single recirculation FEI-E-D		18
Single nut with flange and external recirculation FEE-E-D		20
Cylindrical single nut with internal recirculation ZEI-E-D		26
Singel nut with flange and end-deflector FEA-E-D		28
Double nut with flange and internal single recirculation FDI-E-D		30
Double nut with flange and external recirculation FDE-E-D		32
Cylindrical double nut with internal recirculation ZDI-E-D		34
Double nut with flange and end-deflector FDA-E-D		36

Series								
Size d_0 x P x D_w	FEI-E-D	FEE-E-D	ZEI-E-D	FEA-E-D	FDI-E-D	FDE-E-D	ZDI-E-D	FDA-E-D
25 x 10 x 3.5	■				■			
25 x 10 x 3.969				■				■
25 x 10 x 4.762		■		■		■		■
28 x 16 x 4.762				■				■
32 x 10 x 6.35	■	■	■	■	■	■	■	■
32 x 16 x 6.35				■				■
40 x 10 x 6.35		■		■		■		■
40 x 10 x 7	■		■		■		■	
40 x 12 x 6.35		■		■		■		■
40 x 12 x 7	■							
40 x 12 x 7.144					■			
40 x 16 x 6.35				■				■
50 x 20 x 7.938	■							
80 x 20 x 10	■		■					
80 x 20 x 12.7	■		■				■	

■ Standard, available at short notice

Screws

Precision screw BAS		Page
Tolerance grades: C3, C5		38

Sizes 25 to 80

	500	1000	1500	2000	2500	3000	3500	4000	5000
25 x 10R x 3.5									
25 x 10R x 3.969									
25 x 10R x 4.762									
28 x 16R x 4.762									
32 x 10R x 6.35									
32 x 16R x 6.35									
40 x 10R x 6.35									
40 x 10R x 7									
40 x 12R x 6.35									
40 x 12R x 7									
40 x 12R x 7.144									
40 x1 6R x 6.35									
50 x 20R x 7.938									
80 x 20R x 10									
80 x 20R x 12.7									

→ Screw length (mm)

Bearing

Pillow block unit		Page
SES-F 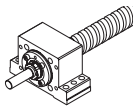		52
SES-L 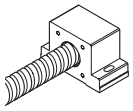		54
SEB-F 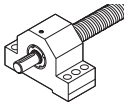		56
SEB-L 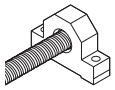		58

Lead p

Diameter d_0	10		12		16		20
25	A	B					
32	A	B			A	B	
40	A	B	A	B	A	B	
50							A
80							A

A = SEB-F and SEB-L
B = SES-F and SES-L

Bearing

Bearing		Page
LAF 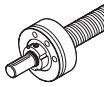		62
LAN 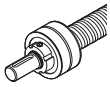		64
LAD		66
LAS 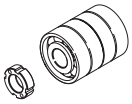		68

Lead P

Diameter d_0	10	12	16	20
25	LAN / LAD	LAN / LAD		
28	LAF	LAF	LAF	LAF
32		LAN / LAD		LAF
40				LAF
50				LAF / LAN / LAD
80				LAF / LAN / LAD

LAF LAN / LAD

Lead P

Diameter d_0	10	12	16	20
25	LAS	LAS		
28	LAS	LAS	LAS	LAS
32		LAS		LAS
40				LAS
50				LAS / LAF
80				LAS / LAF

LAS

Accessories

The load capacities of bearing and ball screw drive must be kept in reasonable balance.

Single parts		Page
Slotted nut NMA, NMZ 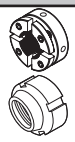		70

Definition of ball screw assembly

JIS 1192 defines a ball screw assembly as follows:

A unit consisting of a ball screw shaft, ball nut and balls which is able to convert rotary motion into linear motion, and vice versa. The basic functioning of a ball screw assembly is easy to describe, but there are numerous different designs and requirements for practical applications.
Several innovations and adaptations have contributed to the extension of the product portfolio.

Precision screws

in a variety of sizes and of unequaled quality have long been an essential part of our product range.

Calculation software and product configuration tool

The Linear motion designer calculation software is used for designing and calculating ball screw assemblies BASA.

The CAD model is created via the product configuration tool. This can be accessed via the Rexroth online portal / eConfigurators and Tools.

www.boschrexroth.de/gewindetriebkonfigurator

This online configuration tool makes it possible to visually configure ball screw assemblies quickly to match specific requirements in each case. The tool automatically checks the plausibility of changed parameters. The link to the eShop means that ball screw assemblies can be directly ordered at any time of the day or night.

Sample applications

Rexroth ball screw assemblies have been successfully implemented worldwide in the following areas:

- Cutting operations
- Forming operations
- Automation and handling
- Woodworking
- Electrical and electronics
- Printing and paper industry
- Injection molding machines
- Food and packaging industries
- Medical technology
- Textile industry
- etc.

Machining center

Vertical axis with driven nut

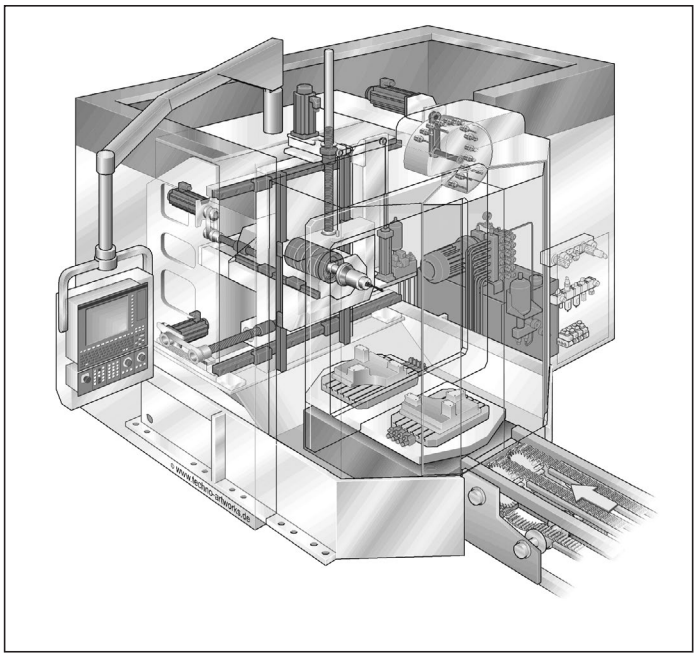

Press brake

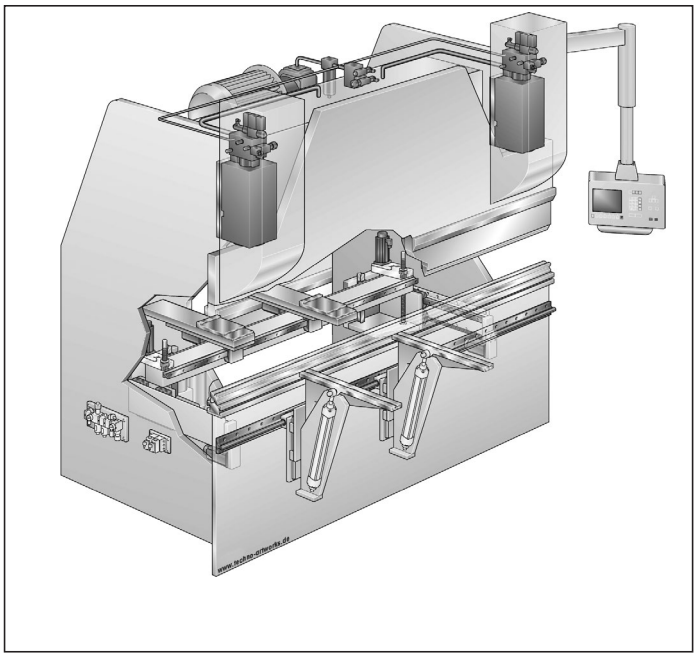

Lathe

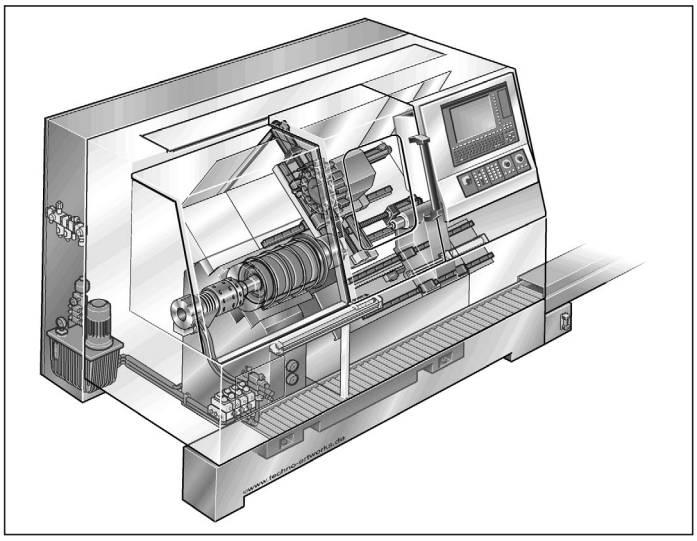

Inquiries and orders

All nuts, screws and end machining details can now be defined with the ordering code as a complete precision ball screw assembly.
We have taken account of all the existing selection criteria as well as adding new ones. The diversity of possible combinations and specifications is basically limitless. Attention is focused in particular on the definition of end machining details. For many design versions there is a prepared definition, which means that a suitable solution can be devised for virtually any application. If you wish to send us an inquiry, simply complete the form at the end of this catalog.

- If you submit a manufacturing drawing as a CAD file in Pro/E, STEP or DXF, you can e-mail the data to us.
- If the drawing exists on paper only, we will of course accept a scan or a drawing sent by conventional mail.
- If no drawing is available, please specify your wishes using the variable ordering code. The available options are shown at several places in the catalog.

Each customer-specific ball screw assembly is issued with an ID number when an order is placed. For queries or repeat orders, simply quote this number. If you know the specific ordering code you can also easily generate a CAD drawing yourself in numerous file formats via the functionality provided on our website.
Rexroth offers an online product configuration tool for this and for directly submitting product requests.
To configure specific solutions quickly and easily, simply go to www.boschrexroth.de/gewindetrieb-konfigurator.
This online tool enables you to visually configure the specific ball screw assembly or planetary screw assembly that you need. You can select any catalog option or any defined product modification. The tool automatically checks the plausibility of changed parameters. Once configuration is complete, 2D and 3D data is available for download in all established formats. As regards end machining, you can choose either standard versions or tailor-made solutions. Rexroth machines the screw ends of the ball screw assembly or planetary screw assembly so that it matches the customer's connecting design and fulfills the desired requirements. The configuration tool which is incorporated into the eShop allows you to obtain a price for customer-specific ball screw assemblies, and also to directly order the product.
The screw diameter size that can be selected for ball screw assemblies ranges from 25 to 80 millimeters. In addition, any type of nut can be chosen.

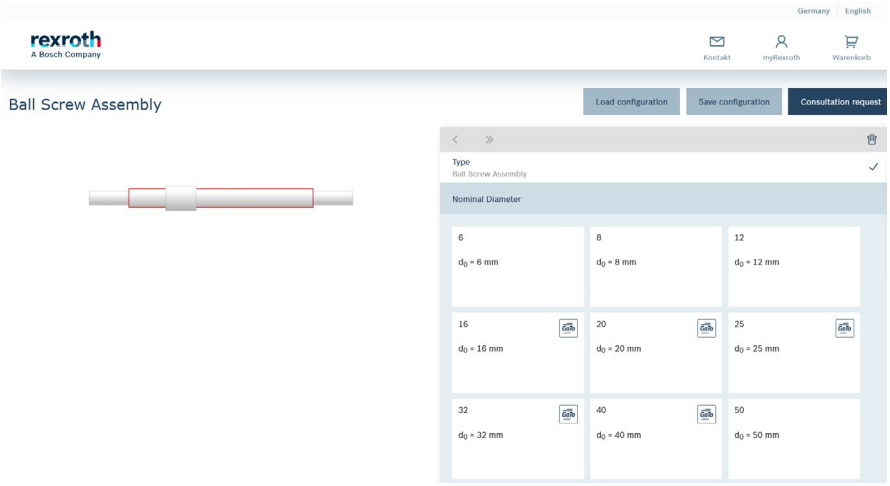

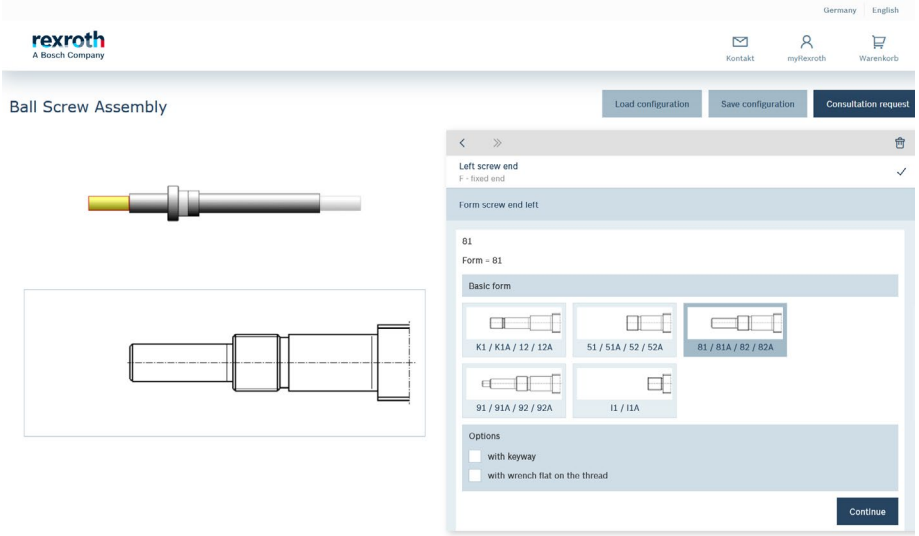

Customers who are registered in the Rexroth Store can generate manufacturing drawings as well as requesting CAD models. This drawing can then be used directly by our production departments, which accelerates order processing and delivery. What's more, in this case you can order directly in the Rexroth Store.
In the case of configuration without prior registration, only CAD models are provided. We can refer to this if an order is placed, and use it to produce a manufacturing drawing.

Access the Rexroth Store via this link: https://store.boschrexroth.com/?cclcl=zh_CN

The ordering code provided on page 14 covers all the parameters of a ball screw assembly. Once you have defined the nominal diameter and lead and entered the total length, the functionality guides you through a succession of dialog boxes allowing you to select the desired options.

Nominal diameters, leads

Nominal diameter d_0	Lead P: 10	12	16	20
25				
28				
32				
40				
50				
80				

Available ball nut sizes

Overall length L_{tot} of a ball screw assembly

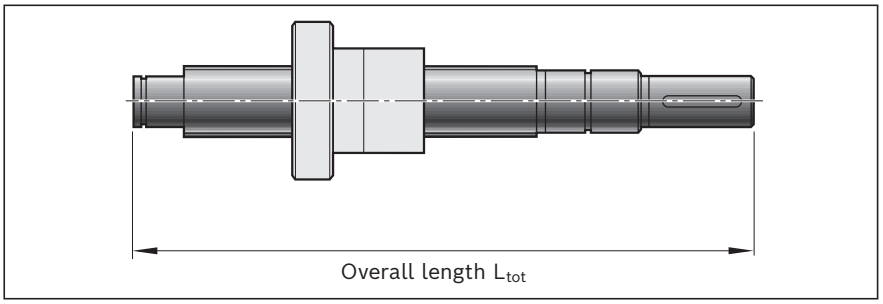

Identification system for short product names BASA / ordering data

Ball screw assembly **BASA 25 x 10 R x 3.5 FEI-E-D - 3 00 1 2 C5 R 81 Z 170 41 Z 170 1234.5 0 1**

Size
- Nominal diameter (mm)
- Lead (mm)
- Direction of lead
  R ... right
- Ball diameter (mm)

Nut type

FEI-E-D	Single nut with flange and internal single recirculation
FEE-E-D	Single nut with flange and external recirculation
ZEI-E-D	Cylindrical single nut wíth internal recirculation
FEA-E-D	Single nut with flange and end-deflector
FDI-E-D	Double nut with flange and internal single recirculation
FDE-E-D	Double nut with flange and external single recirculation
ZDI-E-D	Cylindrical double nut with internal recirculation
FDA-E-D	Double nut with flange and end-deflector

- Number of ball track turns in the nut

Nut rework
- **00*)** ... without
- FB ... Flange form B
- FA ... Flange form A
- FC ... Flange form C

Sealing system
- 0 ... no seal
- **1** ... standard seal

Preload classes
- **2** ... C3 (high preload SN)
- 5 ... C5 (average preload DN)
- 3 ... C1 (slight preload SN)
- 6 ... C2 (average preload SN)
- 4 ... C4 (high preload DN)

Accuracy
- C3, **C5**

Screw
- **R**... Precision screw BAS

Left screw end
- Form: ... standard form
- Option (machining of end face): **Z**... centering; K... none
- Versions: ... standard version

Right screw end
- ... see left screw end

Overall length [mm]

Documentation
- **0** ... Standard (no report)
- 2 ... Torque test report
- 1 ... Lead test report
- 3 ... Lead and torque test report

Lubrication
- 0 ... Preserved
- **1** ... Preserved and nut with basic greasing

*) only cylindrical nut

Mounting direction of nut types

Definition: The centering diameter on a nut with flange points to the right end of the screw.

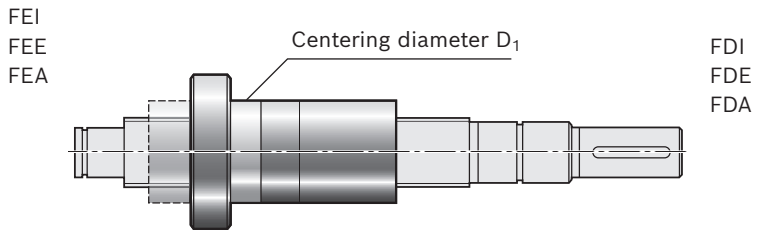

Overview nut types

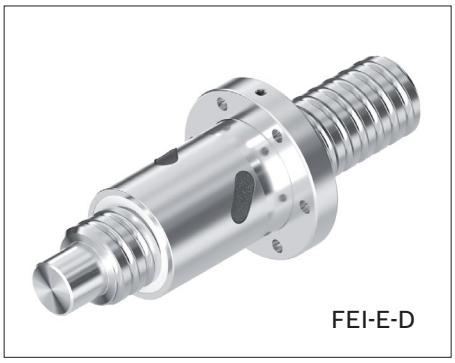
FEI-E-D

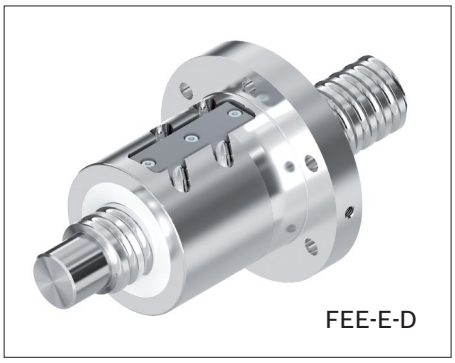
FEE-E-D

ZEI-E-D

FEA-E-D

FDI-E-D

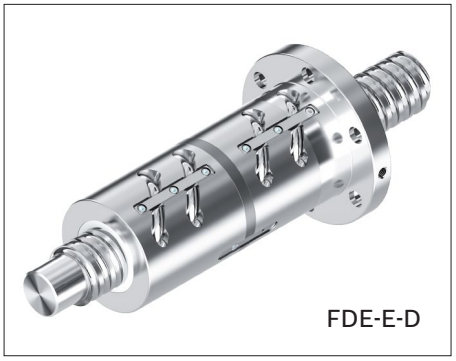
FDE-E-D

ZDI-E-D

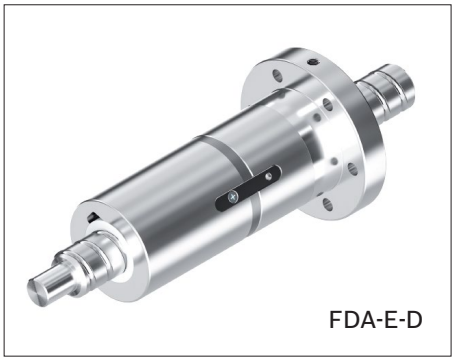
FDA-E-D

Single nut with flange and interal single recirculation FEI-E-D

Mounting dimensions according to JIS 1192

Preload class: C1, C2, C3
Tolerance grade: C3, C5

with standard seals

Note: Supplied only as complete ball screw assembly

d_0 = nominal diameter
P = lead (R = right-hand)
D_W = ball diameter
i = number of ball track turns

Ordering data:

BASA	25 x 10R x 3.5	FEI-E-D - 3	FA	1	2	C3	R	82Z170	41Z170	1250	0	1

Nut type	Size	Load ratings		Linear speed
	d_0 x P x D_w - i	dyn. C (N)	stat. C_0 (N)	v_{max} (m/min)
FEI - E - D	25 x 10R x 3.5 - 3	15150	25000	28
	25 x 10R x 3.5 - 4	19410	33330	28
	25 x 10R x 3.5 - 5	23510	41660	28
	32 x 10R x 6.35 - 3	35330	52510	22
	32 x 10R x 6.35 - 4	45250	70020	22
	40 x 10R x 7 - 3	45610	74390	18
	40 x 10R x 7 - 4	58410	99180	18
	40 x 10R x 7 - 5	70770	123980	18
	40 x 12R x 7 - 3	45530	74290	21
	40 x 12R x 7 - 4	58310	99060	21
	40 x 12R x 7 - 5	70650	123830	21
	50 x 20R x 7.938 - 3	60810	108570	28
	80 x 20R x 10 - 3	108140	237050	18
	80 x 20R x 10 - 4	138500	316070	18
	80 x 20R x 12.7 - 3	142540	279170	18
	80 x 20R x 12.7 - 4	182550	372220	18

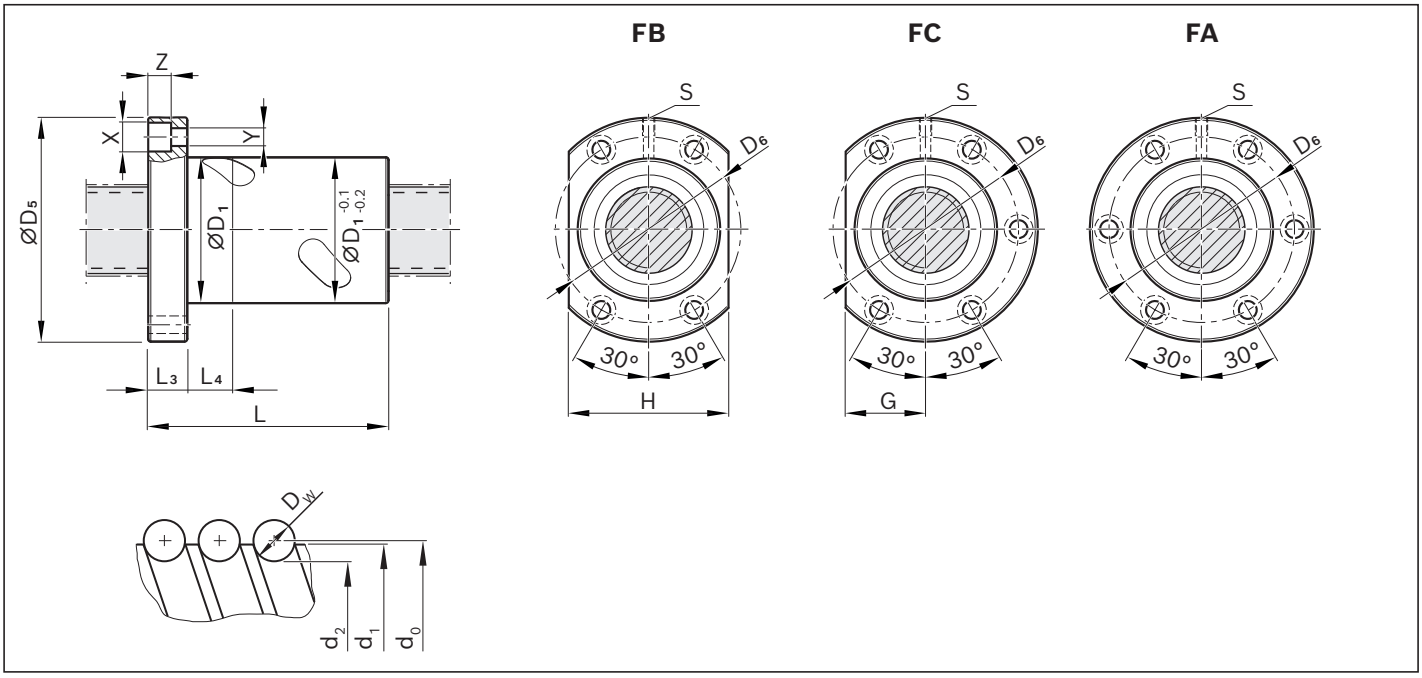

Size	(mm)																Mass
d_0 x P x D_w - i	d_1 0/-0.3	d_2	D_1 g6	Design style	L	D_5	D_6	L_3	L_4	G	H	X	Y	Z	S	φ (°)	m (kg)
25 x 10R x 3.5 - 3	25	22.41	42	FB, FC, FA	71	68	55	10	10	25	50	6.6	11	6.8	M6×1	7.256	0.617
25 x 10R x 3.5 - 4	25	22.41	42	FB, FC, FA	85	68	55	10	10	25	50	6.6	11	6.8	M6×1	7.256	0.704
25 x 10R x 3.5 - 5	25	22.41	42	FB, FC, FA	98	68	55	10	10	25	50	6.6	11	6.8	M6×1	7.256	0.785
32 x 10R x 6.35 - 3	32	27.30	54	FB, FC, FA	72	88	70	15	15	32.5	65	9	15	9	M6×1	5.680	1.149
32 x 10R x 6.35 - 4	32	27.30	54	FB, FC, FA	83	88	70	15	15	32.5	65	9	15	9	M6×1	5.680	1.252
40 x 10R x 7 - 3	40	34.82	63	FB, FC, FA	76	106	78	14	14	38.5	77	9	15	9	M8×1	4.549	1.258
40 x 10R x 7 - 4	40	34.82	63	FB, FC, FA	86	106	78	14	14	38.5	77	9	15	9	M8×1	4.549	1.370
40 x 10R x 7 - 5	40	34.82	63	FB, FC, FA	97	106	78	14	14	38.5	77	9	15	9	M8×1	4.549	1.494
40 x 12R x 7 - 3	40	34.82	63	FB, FC, FA	84	106	78	14	14	38.5	77	9	15	9	M8×1	5.454	1.369
40 x 12R x 7 - 4	40	34.82	63	FB, FC, FA	96	106	78	14	14	38.5	77	9	15	9	M8×1	5.454	1.506
40 x 12R x 7 - 5	40	34.82	63	FB, FC, FA	109	106	78	14	14	38.5	77	9	15	9	M8×1	5.454	1.656
50 x 20R x 7.938 - 3	50	44.13	78	FB, FC, FA	136	121	97	28	28	46	92	13.5	20	13	PT1/8	7.256	4.141
80 x 20R x 10 - 3	80	72.60	115	FB, FC, FA	142	173	135	25	25	67	134	13.5	20	13	PT1/8	4.549	6.460
80 x 20R x 10 - 4	80	72.60	115	FB, FC, FA	162	173	135	25	25	67	134	13.5	20	13	PT1/8	4.549	7.136
80 x 20R x 12.7 - 3	80	70.60	125	FB, FC, FA	142	175	145	25	25	70.5	141	13.5	20	13	PT1/8	4.549	8.206
80 x 20R x 12.7 - 4	80	70.60	125	FB, FC, FA	162	175	145	25	25	70.5	141	13.5	20	13	PT1/8	4.549	9.110

Single nut with flange and external recirculation FEE-E-D

Mounting dimensions according to JIS 1192

Preload class: C1, C2, C3
Tolerance grade: C3, C5

with standard seals

Supplied only as complete ball screw assembly

d_0 = nominal diameter
P = lead (R = right-hand)
D_W = ball diameter
i = number of ball track turns

Ordering data:

BASA	25 x 10R x 4.762	FEE-E-D - 1.5x2	FA	1	2	C3	R	82Z170	41Z170	1250	0	1

Nut type	Size d_0 x P x D_w - i	Load ratings[3)] dyn. C (N)	 stat. C_0 (N)	Linear speed[1)] v_{max} (m/min)
FEE - E - D	25 x 10R x 4.762 - 1.5x2	24940	38620	32
	25 x 10R x 4.762 - 2.5x1	21320	32180	32
	25 x 10R x 4.762 - 3.5x1	28480	45060	32
	32 x 10R x 6.35 - 1.5x2	40580	64630	25
	32 x 10R x 6.35 - 2.5x1	34690	53860	25
	32 x 10R x 6.35 - 2.5x2	62960	107720	25
	32 x 10R x 6.35 - 3.5x1	46330	75410	25
	40 x 10R x 6.35 - 1.5x2	45610	82100	20
	40 x 10R x 6.35 - 2.5x1	38990	68420	20
	40 x 10R x 6.35 - 2.5x2	70780	136840	20
	40 x 10R x 6.35 - 3.5x1	52080	95790	20
	40 x 12R x 6.35 - 2.5x1	38930	68330	24
	40 x 12R x 6.35 - 2.5x2	70660	136670	24
	40 x 12R x 6.35 - 3.5x1	51990	95670	24

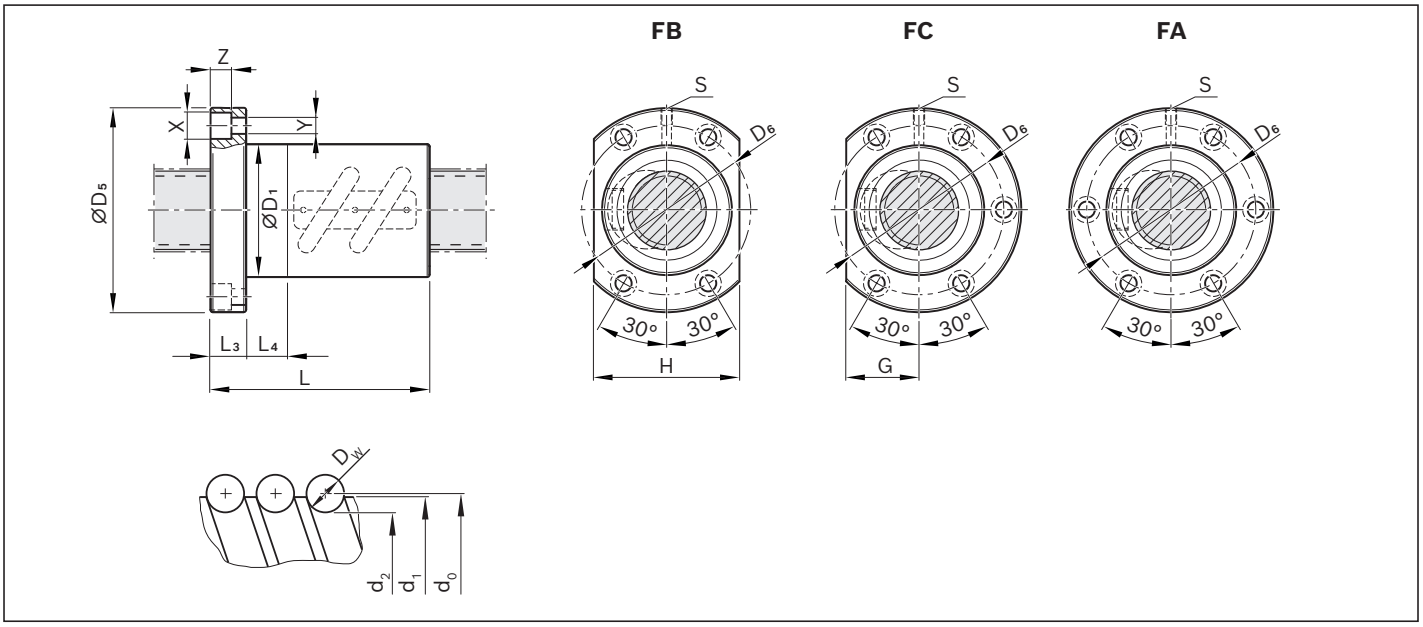

Size d_0 x P x D_w - i	d_1 0/-0.3	d_2	D_1 g6	Design style	L	L_3	L_4	D_5	D_6	G	H	X	Y	Z	S	φ	Mass m
25 x 10R x 4.762 - 1.5x2	25	21.476	58	FB, FC, FA	71	15	15	85	71	33.5	67	6.6	11	6.8	M6×1	7.256	1.468
25 x 10R x 4.762 - 2.5x1	25	21.476	58	FB, FC, FA	65	15	15	85	71	33.5	67	6.6	11	6.8	M6×1	7.256	1.374
25 x 10R x 4.762 - 3.5x1	25	21.476	58	FB, FC, FA	75	15	15	85	71	33.5	67	6.6	11	6.8	M6×1	7.256	1.531
32 x 10R x 6.35 - 1.5x2	32	27.3	74	FB, FC, FA	78	15	15	108	90	42.7	85	9	15	9	M6×1	5.681	2.529
32 x 10R x 6.35 - 2.5x1	32	27.3	74	FB, FC, FA	68	15	15	108	90	42.7	85	9	15	9	M6×1	5.681	2.278
32 x 10R x 6.35 - 2.5x2	32	27.3	74	FB, FC, FA	97	15	15	108	90	42.7	85	9	15	9	M6×1	5.681	3.006
32 x 10R x 6.35 - 3.5x1	32	27.3	74	FB, FC, FA	78	15	15	108	90	42.7	85	9	15	9	M6×1	5.681	2.529
40 x 10R x 6.35 - 1.5x2	40	35.3	82	FB, FC, FA	81	18	18	124	102	48	96	11	18	11	M8×1	4.55	3.283
40 x 10R x 6.35 - 2.5x1	40	35.3	82	FB, FC, FA	71	18	18	124	102	48	96	11	18	11	M8×1	4.55	2.996
40 x 10R x 6.35 - 2.5x2	40	35.3	82	FB, FC, FA	103	18	18	124	102	48	96	11	18	11	M8×1	4.55	3.913
40 x 10R x 6.35 - 3.5x1	40	35.3	82	FB, FC, FA	81	18	18	124	102	48	96	11	18	11	M8×1	4.55	3.283
40 x 12R x 6.35 - 2.5x1	40	35.3	86	FB, FC, FA	77	18	18	128	106	50	100	11	18	11	M8×1	5.455	3.540
40 x 12R x 6.35 - 2.5x2	40	35.3	86	FB, FC, FA	112	18	18	128	106	50	100	11	18	11	M8×1	5.455	4.695
40 x 12R x 6.35 - 3.5x1	40	35.3	86	FB, FC, FA	91	18	18	128	106	50	100	11	18	11	M8×1	5.455	4.002

Single cylindrical nut with internal recirculation ZEI-E-D

Mounting dimensions according to JIS 1192

Preload class: C1, C2, C3
Tolerance grade: C3, C5

with standard seals

Supplied only as complete ball screw assembly

d_0 = nominal diameter
P = lead (R = right-hand)
D_W = ball diameter
i = number of ball track turns

Ordering data:

BASA	32 x 10R x 6.35	ZEI-E-D - 3	00	1	2	C3	R	82Z200	41Z200	1250	0	1

Nut type	Size	Load ratings		Linear speed
	d_0 x P x D_w - i	dyn. C (N)	stat. C_0 (N)	v_{max} (m/min)
ZEI - E - D	32 x 10R x 6.35 - 3	35330	52510	22
	32 x 10R x 6.35 - 4	45250	70020	22
	40 x 10R x 7 - 3	45610	74390	18
	40 x 10R x 7 - 4	58410	99180	18
	40 x 10R x 7 - 5	70770	123980	18
	80 x 20R x 10 - 3	108140	237050	18
	80 x 20R x 10 - 4	138500	316070	18
	80 x 20R x 12.7 - 3	142540	279170	18
	80 x 20R x 12.7 - 4	182550	372220	18

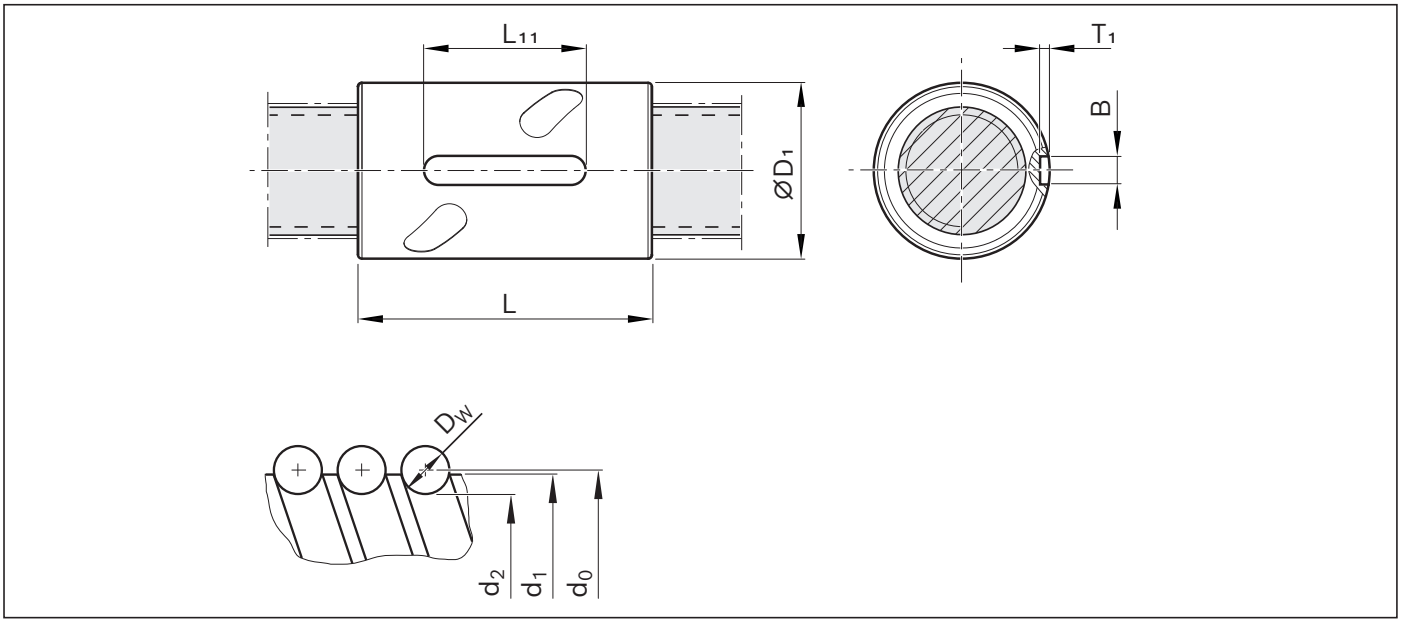

Size	(mm)								Mass
	d_1	d_2	D_1	L	L_{11}	B	T_1	φ	m
d_0 x P x D_w - i	0/-0.3		g6	±0.1		h		(°)	(kg)
32 x 10R x 6.35 - 3	32	27.3	54	65	25	6	3.5	5.681	0.581
32 x 10R x 6.35 - 4	32	27.3	54	75	25	6	3.5	5.681	0.674
40 x 10R x 7 - 3	40	34.82	63	71	25	6	3.5	4.55	0.683
40 x 10R x 7 - 4	40	34.82	63	81	25	6	3.5	4.55	0.795
40 x 10R x 7 - 5	40	34.82	63	92	32	6	3.5	4.55	0.919
80 x 20R x 10 - 3	80	72.6	115	132	50	10	5	4.55	4.925
80 x 20R x 10 - 4	80	72.6	115	152	63	10	5	4.55	5.600
80 x 20R x 12.7 - 3	80	70.6	125	132	63	10	5	4.55	6.467
80 x 20R x 12.7 - 4	80	70.6	125	152	63	10	5	4.55	7.371

Single nut with flange and end - deflector FEA-E-D

Mounting dimensions according to JIS 1192
Preload class: C1, C2, C3
Tolerance grade: C3, C5

with standard seals

Note: Supplied only as complete ball screw assembly

d_0 = nominal diameter
P = lead (R = right-hand)
D_W = ball diameter
i = number of ball track turns

Ordering data:

BASA	25 x 10R x 3.969	FEA-E-D - 4	FA	1	2	C3	R	82Z170	41Z170	1250	0	1

Nut type	Size	Load ratings		Linear speed
	d_0 x P x D_w - i	dyn. C (N)	stat. C_0 (N)	v_{max} (m/min)
FEA - E - D	25 x 10R x 3.969 - 4	24920	42570	72
	25 x 10R x 4.762 - 4	31940	51500	72
	28 x 16R x 4.762 - 5	40580	71940	103
	32 x 10R x 6.35 - 3	40580	64630	56
	32 x 10R x 6.35 - 4	51970	86180	56
	32 x 10R x 6.35 - 5	62960	107720	56
	32 x 16R x 6.35 - 4	51500	85590	90
	40 x 10R x 6.35 - 4	58420	109470	45
	40 x 10R x 6.35 - 5	70780	136840	45
	40 x 12R x 6.35 - 4	58320	109330	54
	40 x 16R x 6.35 - 4	58080	108980	72

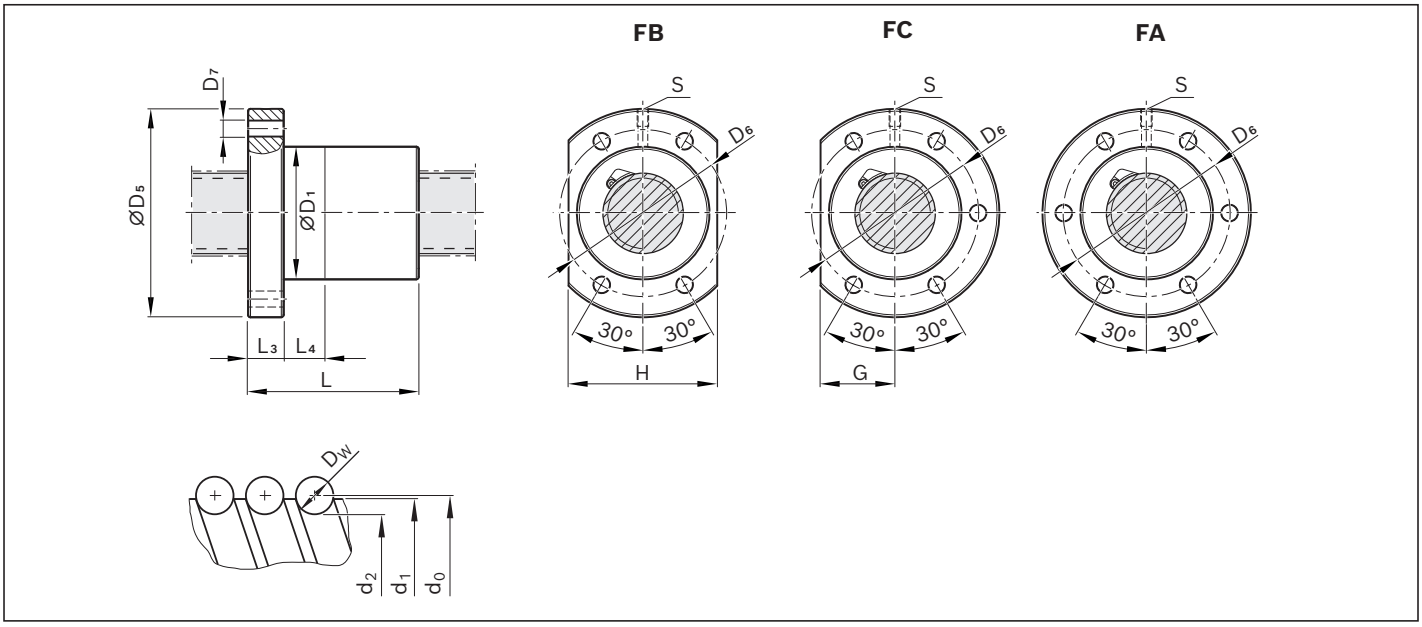

Size	(mm)														Mass
d_0 x P x D_w - i	d_1 0/-0.3	d_2	D_1 g6	Design style	L	D_5	D_6	D_7	L_3	L_4	G	H	S	φ (°)	m (kg)
25 x 10R x 3.969 - 4	25	22.06	43	FB, FC, FA	64	64	51	6.6	12	12	23.5	47	M6×1	7.256	0.588
25 x 10R x 4.762 - 4	25	21.48	45	FB, FC, FA	65	65	54	6.6	15	15	24.5	49	M6×1	7.256	0.684
28 x 16R x 4.762 - 5	28	24.48	48	FB, FC, FA	104	74	60	6.6	12	12	26.5	53	M6×1	10.309	1.068
32 x 10R x 6.35 - 3	32	27.3	57	FB, FC, FA	58	87	72	9	16	16	33	66	M6×1	5.681	1.085
32 x 10R x 6.35 - 4	32	27.3	57	FB, FC, FA	68	87	72	9	16	16	33	66	M6×1	5.681	1.198
32 x 10R x 6.35 - 5	32	27.3	57	FB, FC, FA	78	87	72	9	16	16	33	66	M6×1	5.681	1.312
32 x 16R x 6.35 - 4	32	27.3	57	FB, FC, FA	90	87	72	9	16	16	33	66	M6×1	9.043	1.481
40 x 10R x 6.35 - 4	40	35.3	65	FB, FC, FA	73	95	80	9	18	18	36	72	M8×1	4.55	1.501
40 x 10R x 6.35 - 5	40	35.3	65	FB, FC, FA	83	95	80	9	18	18	36	72	M8×1	4.55	1.634
40 x 12R x 6.35 - 4	40	35.3	65	FB, FC, FA	82	95	80	9	18	18	36	72	M8×1	5.455	1.637
40 x 16R x 6.35 - 4	40	35.3	65	FB, FC, FA	97	95	80	9	18	18	36	72	M8×1	7.256	1.839

Double nut with flange and internal single recirculation FDI-E-D

Mounting dimensions according to JIS 1192

Preload class: C4, C5
Tolerance grade C3, C5

with standard seals

Supplied only as complete ball screw assembly

d_0 = nominal diameter
P = lead (R = right-hand)
D_W = ball diameter
i = number of ball track turns

Ordering data:

BASA	25 x 10R x 3.5	FDI-E-D - 3	FA	1	4	C3	R	82Z170	41Z170	1250	0	1

Nut type	Size d_0 x P x D_w - i	Load ratings dyn. C (N)	 stat. C_0 (N)	Linear speed v_{max} (m/min)
FDI - E - D	25 x 10R x 3.5 - 3	15150	25000	28
	25 x 10R x 3.5 - 4	19410	33330	28
	32 x 10R x 6.35 - 3	35330	52510	22
	32 x 10R x 6.35 - 4	45250	70020	22
	40 x 10R x 7 - 3	45610	74390	18
	40 x 10R x 7 - 4	58410	99180	18
	40 x 12R x 7.144 - 3	47380	77280	21
	40 x 12R x 7.144 - 4	60680	103040	21

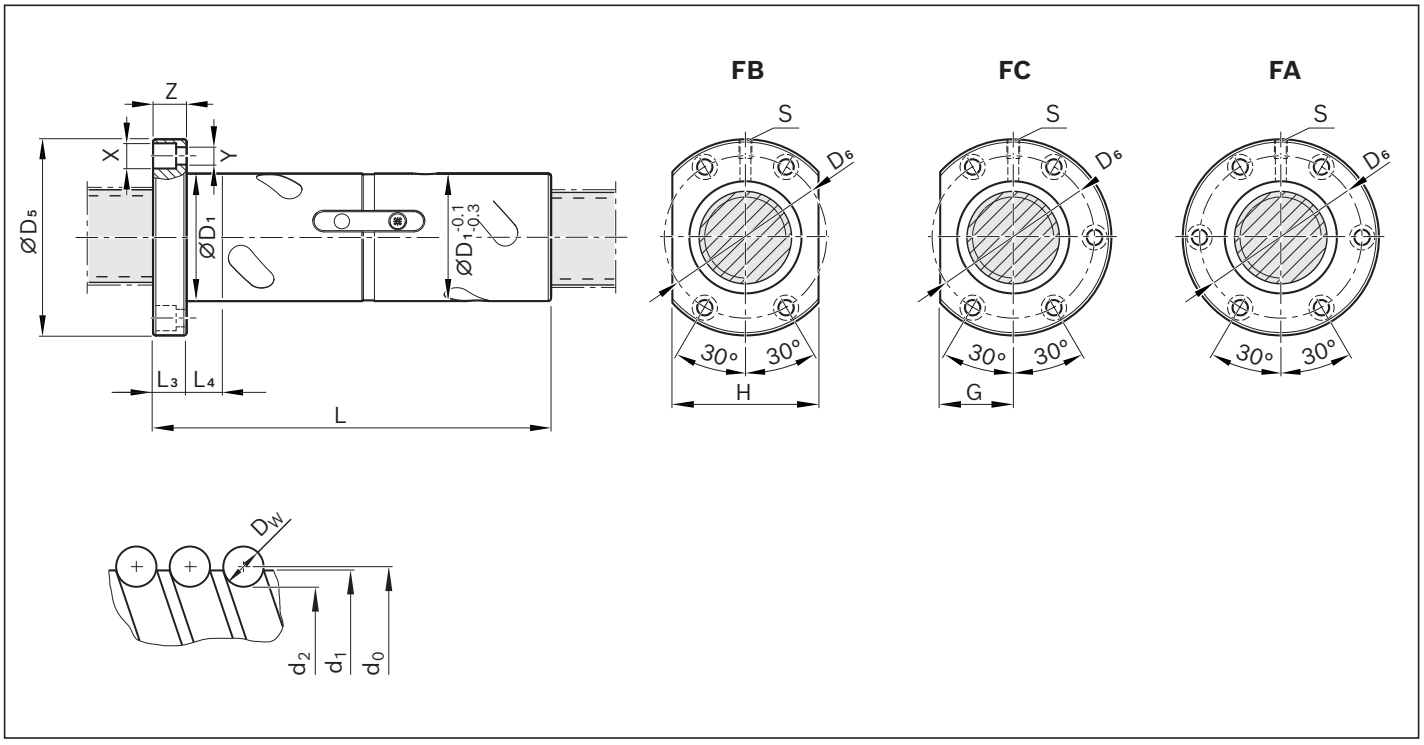

Size	(mm)																Mass
d_0 x P x D_w - i	d_1 0/-0.3	d_2	D_1 g6	Design style	L	L_3	L_4	D_5	D_6	G	H	X	Y	Z	S	φ (°)	m (kg)
25 x 10R x 3.5 - 3	25	22.41	40	FB, FC, FA	133	10	10	68	51	24.5	49	6.6	11	6.8	M6×1	7.256	0.83
25 x 10R x 3.5 - 4	25	22.41	40	FB, FC, FA	150	10	10	68	51	24.5	49	6.6	11	6.8	M6×1	7.256	0.918
32 x 10R x 6.35 - 3	32	27.301	54	FB, FC, FA	135	15	15	88	70	32.5	65	9	15	9	M6×1	5.681	1.647
32 x 10R x 6.35 - 4	32	27.301	54	FB, FC, FA	155	15	15	88	70	32.5	65	9	15	9	M6×1	5.681	1.889
40 x 10R x 7 - 3	40	34.82	63	FB, FC, FA	144	14	14	106	78	38.5	77	9	15	9	M8×1	4.450	2.022
40 x 10R x 7 - 4	40	34.82	63	FB, FC, FA	164	14	14	106	78	38.5	77	9	15	9	M8×1	4.450	2.247
40 x 12R x 7.144 - 3	40	34.713	63	FB, FC, FA	154	18	18	106	84	38.5	77	11	18	11	M8×1	5.455	2.652
40 x 12R x 7.144 - 4	40	34.713	63	FB, FC, FA	182	18	18	106	84	38.5	77	11	18	11	M8×1	5.455	2.925

Double nut with flange and external recirculation FDE-E-D

Mounting dimensions according to JIS 1192

Preload class: C4, C5
Tolerance grade C3, C5

with standard seals

Note: Supplied only as complete ball screw assembly

d_0 = nominal diameter
P = lead (R = right-hand)
D_W = ball diameter
i = number of ball track turns

Ordering data:

BASA	25 x 10R x 4.762	FDE-E-D - 1.5x2	FA	1	4	C3	R	81K170	41K170	1250	0	1

Nut type	Size	Load ratings		Linear speed
	d_0 x P x D_w - i	dyn. C (N)	stat. C_0 (N)	v_{max} (m/min)
FDE - E - D	25 x 10R x 4.762 - 1.5x2	24940	38620	32
	25 x 10R x 4.762 - 2.5x1	21320	32180	32
	25 x 10R x 4.762 - 3.5x1	28480	45060	32
	32 x 10R x 6.35 - 1.5x2	40580	64630	25
	32 x 10R x 6.35 - 2.5x1	34690	53860	25
	32 x 10R x 6.35 - 2.5x2	62960	107720	25
	32 x 10R x 6.35 - 3.5x1	46330	75410	25
	40 x 10R x 6.35 - 1.5x2	45610	82100	20
	40 x 10R x 6.35 - 2.5x1	38990	68420	20
	40 x 10R x 6.35 - 2.5x2	70780	136840	20
	40 x 10R x 6.35 - 3.5x1	52080	95790	20
	40 x 12R x 6.35 - 2.5x1	38930	68330	24
	40 x 12R x 6.35 - 2.5x2	70660	136670	24
	40 x 12R x 6.35 - 3.5x1	51990	95670	24

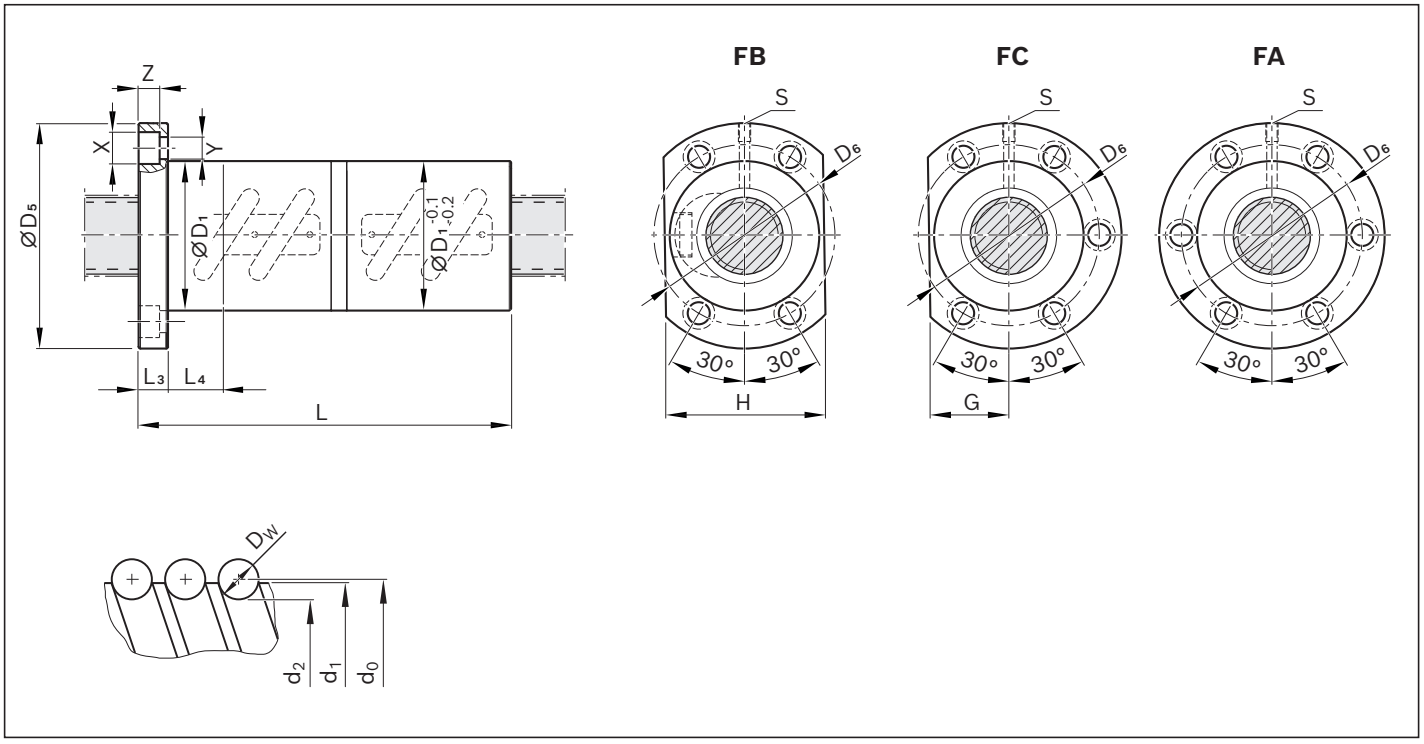

Size	(mm)																Mass
d_0 x P x D_w - i	d_1 0/-0.3	d_2	D_1 g6	Design style	L	D_5	D_6	L_3	L_4	G	H	X	Y	Z	S	φ (°)	m (kg)
25 x 10R x 4.762 - 1.5x2	25	21.476	58	FB, FC, FA	134	85	71	15	15	33.5	67	6.6	11	6.8	M6×1	7.256	2.454
25 x 10R x 4.762 - 2.5x1	25	21.476	58	FB, FC, FA	117	85	71	15	15	33.5	67	6.6	11	6.8	M6×1	7.256	2.188
25 x 10R x 4.762 - 3.5x1	25	21.476	58	FB, FC, FA	138	85	71	15	15	33.5	67	6.6	11	6.8	M6×1	7.256	2.517
32 x 10R x 6.35 - 1.5x2	32	27.3	74	FB, FC, FA	138	108	90	15	15	42.5	85	9	15	9	M6×1	5.681	4.034
32 x 10R x 6.35 - 2.5x1	32	27.3	74	FB, FC, FA	118	108	90	15	15	42.5	85	9	15	9	M6×1	5.681	3.533
32 x 10R x 6.35 - 2.5x2	32	27.3	74	FB, FC, FA	177	108	90	15	15	42.5	85	9	15	9	M6×1	5.681	5.013
32 x 10R x 6.35 - 3.5x1	32	27.3	74	FB, FC, FA	148	108	90	15	15	42.5	85	9	15	9	M6×1	5.681	4.285
40 x 10R x 6.35 - 1.5x2	40	35.3	82	FB, FC, FA	141	124	102	18	18	48	96	11	18	11	M8×1	4.55	5.003
40 x 10R x 6.35 - 2.5x1	40	35.3	82	FB, FC, FA	131	124	102	18	18	48	96	11	18	11	M8×1	4.55	4.716
40 x 10R x 6.35 - 2.5x2	40	35.3	82	FB, FC, FA	180	124	102	18	18	48	96	11	18	11	M8×1	4.55	6.121
40 x 10R x 6.35 - 3.5x1	40	35.3	82	FB, FC, FA	151	124	102	18	18	48	96	11	18	11	M8×1	4.55	5.290
40 x 12R x 6.35 - 2.5x1	40	35.3	86	FB, FC, FA	137	128	106	18	18	50	100	11	18	11	M8×1	5.455	5.521
40 x 12R x 6.35 - 2.5x2	40	35.3	86	FB, FC, FA	208	128	106	18	18	50	100	11	18	11	M8×1	5.455	7.865
40 x 12R x 6.35 - 3.5x1	40	35.3	86	FB, FC, FA	161	128	106	18	18	50	100	11	18	11	M8×1	5.455	6.313

Double cylindrical nut with internal recirculation ZDI-E-D

Mounting dimensions according to JIS 1192

Preload class: C4, C5
Tolerance grade C3, C5

with standard seals

Supplied only as complete ball screw assembly

d_0 = nominal diameter
P = lead (R = right-hand)
D_W = ball diameter
i = number of ball track turns

Ordering data:

BASA	32 x 10R x 6.35	ZDI-E-D - 3	00	1	4	C3	R	82Z170	41Z170	1250	0	1

Nut type	Size d_0 x P x D_w - i	Load ratings dyn. C (N)	 stat. C_0 (N)	Linear speed v_{max} (m/min)
ZDI - E - D	32 x 10R x 6.35 - 3	35330	52510	22
	32 x 10R x 6.35 - 4	45250	70020	22
	40 x 10R x 7 - 3	45610	74390	18
	40 x 10R x 7 - 4	58410	99180	18
	80 x 20R x 12.7 - 3	142540	279170	18
	80 x 20R x 12.7 -4	182550	372220	18
	80 x 20R x 12.7 - 6	258720	558340	18

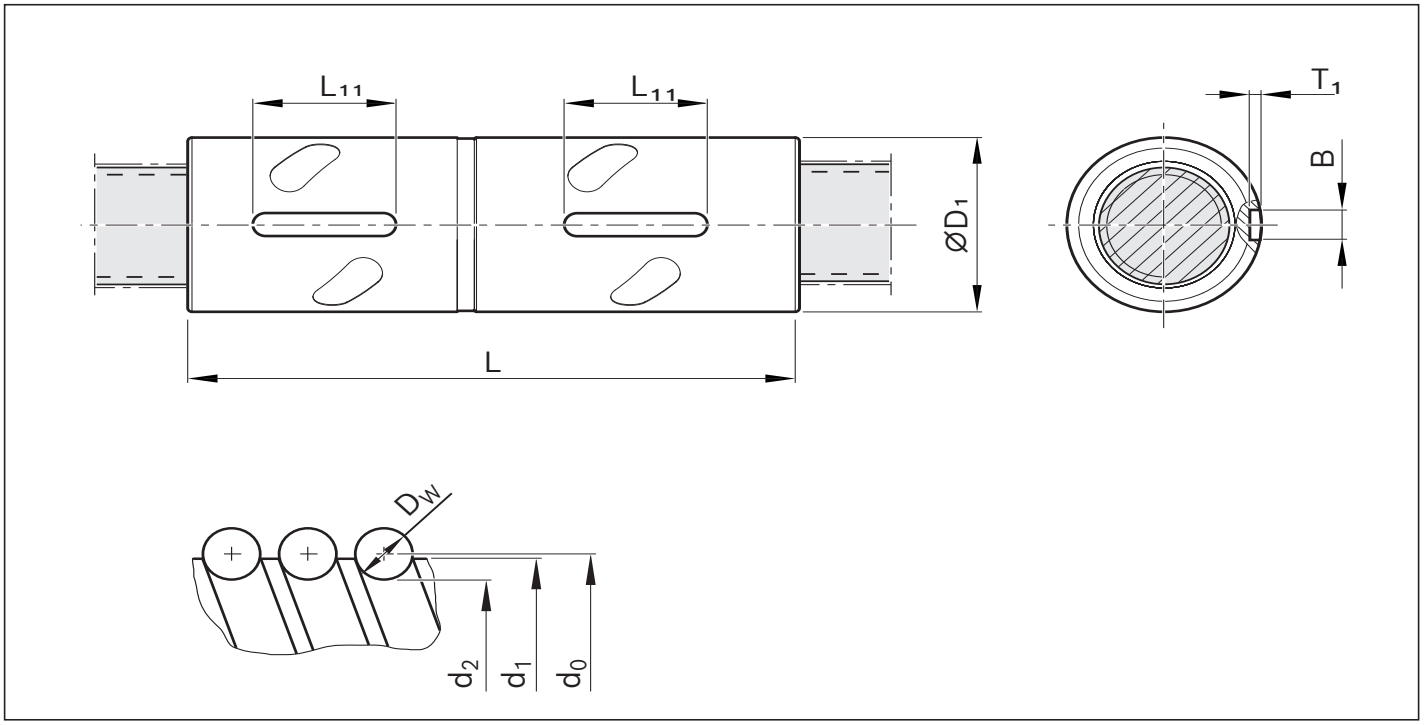

Size	(mm)								Mass
	d_1	d_2	D_1	L	L_{11}	B	T_1	φ	m
d_0 x P x D_w - i	0/-0.3		g6	±0.1		h9		(°)	(kg)
32 x 10R x 6.35 - 3	32	27.3	54	132	25	6	3.5	5.681	1.232
32 x 10R x 6.35 - 4	32	27.3	54	152	25	6	3.5	5.681	1.418
40 x 10R x 7 - 3	40	34.82	63	139	25	6	3.5	4.55	1.445
40 x 10R x 7 - 4	40	34.82	63	159	25	6	3.5	4.55	1.671
80 x 20R x 12.7 - 3	80	70.6	125	230	63	10	5	4.55	11.710
80 x 20R x 12.7 -4	80	70.6	125	272	63	10	5	4.55	13.700
80 x 20R x 12.7 - 6	80	70.6	125	376	63	10	5	4.55	17.948

Double nut with flange and end-deflector FDA-E-D

Mounting dimensions according to JIS 1192

Preload class: C4, C5
Tolerance grade C3, C5

with standard seals

Note: Supplied only as complete ball screw assembly

d_0 = nominal diameter
P = lead (R = right-hand)
D_W = ball diameter
i = number of ball track turns

Ordering data:

BASA	25 x 10R x 3.969	FDA-E-D - 4	FA	1	4	C3	R	82Z170	41Z170	1250	0	1

Nut type	Size d_0 x P x D_w - i	Load ratings dyn. C (N)	 stat. C_0 (N)	Linear speed v_{max} (m/min)
FDA - E - D	25 x 10R x 3.969 - 4	24920	42570	72
	25 x 10R x 4.762 - 4	31940	51500	72
	28 x 16R x 4.762 - 5	40580	71940	103
	32 x 10R x 6.35 - 3	40580	64630	56
	32 x 10R x 6.35 - 4	51970	86180	56
	32 x 16R x 6.35 -4	51500	85590	90
	40 x 10R x 6.35 - 4	58420	109470	45
	40 x 12R x 6.35 - 4	58320	109330	54
	40 x 16R x 6.35 - 4	58080	108980	72

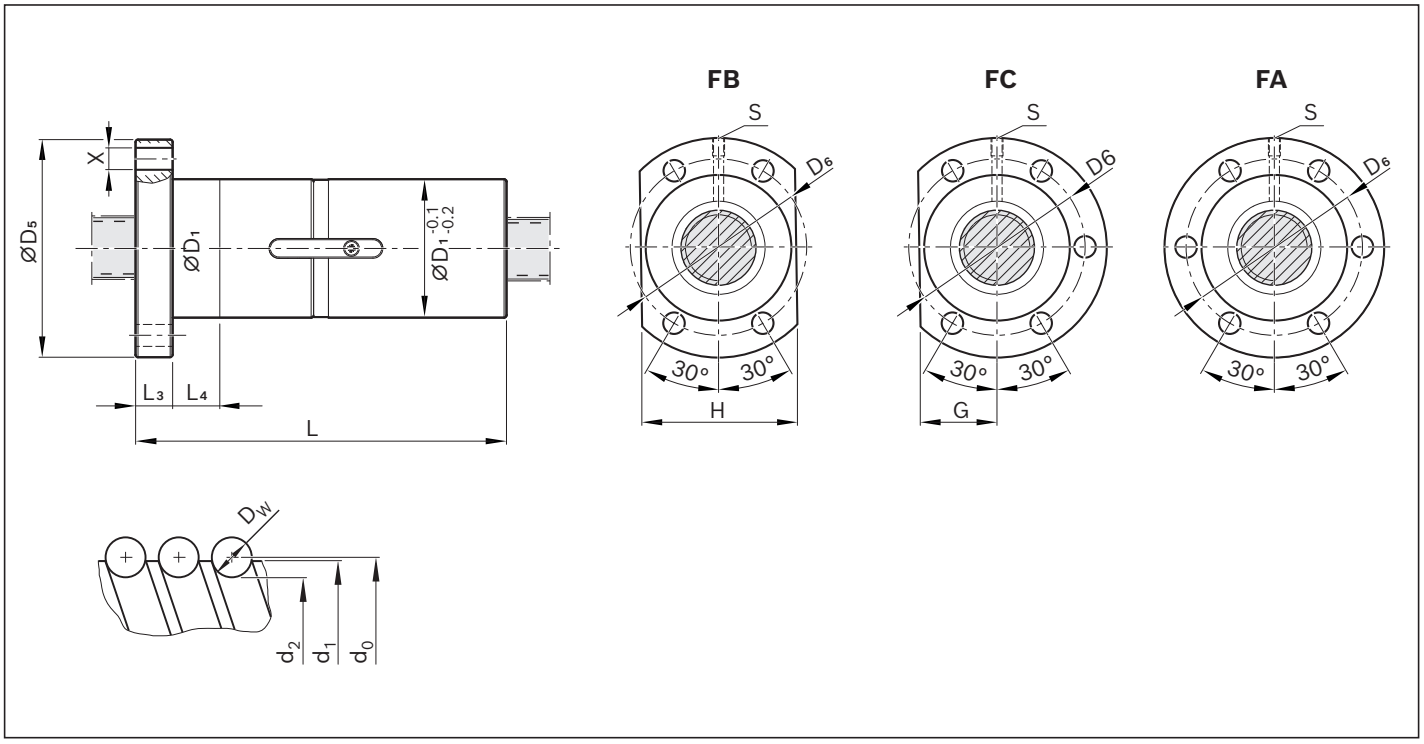

Size d_0 x P x D_w - i	d_1 0/-0.3	d_2	D_1 g6	Design style	L	D_5	L_4	D_6	G	H	L_3	X	S	φ	Mass m (kg)
25 x 10R x 3.969 - 4	25	22.06	43	FB, FC, FA	124	64	12	51	23.5	47	12	6.6	M6×1	7.256	0.983
25 x 10R x 4.762 - 4	25	21.48	45	FB, FC, FA	125	65	15	54	24.5	49	15	6.6	M6×1	7.256	1.087
28 x 16R x 4.762 - 5	28	24.48	48	FB, FC, FA	206	74	12	60	26.5	53	12	6.6	M6×1	10.309	1.918
32 x 10R x 6.35 - 3	32	27.3	57	FB, FC, FA	118	87	16	72	33	66	16	9	M6×1	5.681	1.766
32 x 10R x 6.35 - 4	32	27.3	57	FB, FC, FA	138	87	16	72	33	66	16	9	M6×1	5.681	1.994
32 x 16R x 6.35 -4	32	27.3	57	FB, FC, FA	186	87	16	72	33	66	16	9	M6×1	9.043	2.607
40 x 10R x 6.35 - 4	40	35.3	65	FB, FC, FA	143	95	18	80	36	72	18	9	M8×1	4.55	2.430
40 x 12R x 6.35 - 4	40	35.3	65	FB, FC, FA	166	95	18	80	36	72	18	9	M8×1	5.455	2.768
40 x 16R x 6.35 - 4	40	35.3	65	FB, FC, FA	193	95	18	80	36	72	18	9	M8×1	7.256	3.181

Precision screw

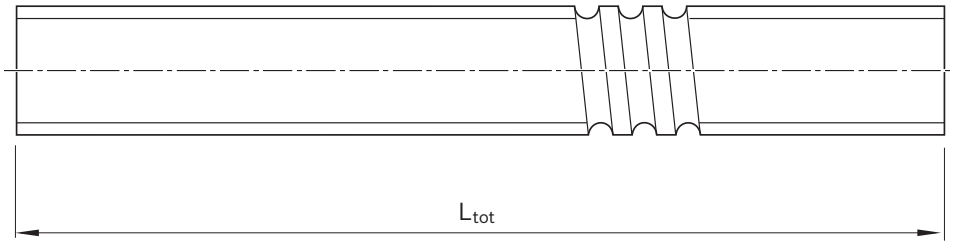

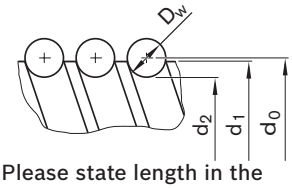

Please state length in the
“Inquiry/Order Form”
L_{tot} = overall length

Size	Part number		(mm)		Moment of inertia	Maximum length (mm)	Mass
	Tolerance grade		d_1	d_2	J_s	Standard	
d_0 x P x D_W	C3	C5	0/-0.3		(kg · cm²/m)		(kg/m)
25 x 10R x 3.5	-	-	25	22.4	0.023601522	2000	3.36
25 x 10R x 3.969	-	-	25	22.1	0.022912352	2000	3.31
25 x 10R x 4.762	-	-	25	21.5	0.021606602	2000	3.20
28 x 16R x 4.762	-	-	28	24.5	0.035276466	2000	4.10
32 x 10R x 6.35	-	-	32	27.3	0.057037975	2500	5.19
32 x 16R x 6.35	-	-	32	27.3	0.057037975	2500	5.19
40 x 10R x 6.35	-	-	40	35.3	0.149676983	4000	8.45
40 x 10R x 7	-	-	40	34.8	0.145192734	4000	8.30
40 x 12R x 6.35	-	-	40	35.3	0.149676983	4000	8.45
40 x 12R x 7	-	-	40	34.8	0.145192734	4000	8.30
40 x 12R x 7.144	-	-	40	34.7	0.144297026	4000	8.27
40 x 16R x 6.35	-	-	40	35.3	0.149676983	4000	8.45
50 x 20R x 7.938	-	-	50	44.1	0.365030128	4000	13.19
80 x 20R x 10	-	-	80	72.6	2.543950048	5000	34.96
80 x 20R x 12.7	-	-	80	70.6	2.394831723	5000	33.79

only available as complete ball screw assembly

Overview of screw ends

Screw ends, forms for a left or right screw end

Basic version			with keyway		
00	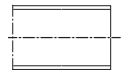	page 37			
L1	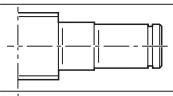	page 38			
21	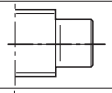	page 40			
31	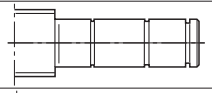	page 42			
41	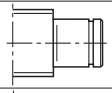	page 44			
51	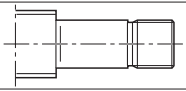	page 46	52	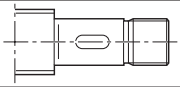	page 46
81	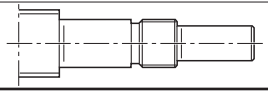	page 48	82	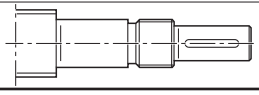	page 48

End machining of end-face

Z Centering hole
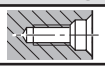

Abbreviations

C	=	dynamic load rating
C_0	=	static load rating
d_0 x P	=	size
d_0	=	nominal diameter
F_{aB}	=	axial breaking load of slotted nut
G	=	female thread
n_G	=	limit speed (grease)
No.	=	part number
M_A	=	tightening torque of slotted nut
M_{AG}	=	tightening torque of set screw
M_{RL}	=	bearing friction torque with seal
M_p	=	maximum permissible drive torque (condition: no radial load at drive journal)
R_{fb}	=	rigidity (axial)
R_{kl}	=	rigidity against tilting
P	=	lead (R = right-hand)
S	=	hex socket
Z	=	centering hole

Form 00

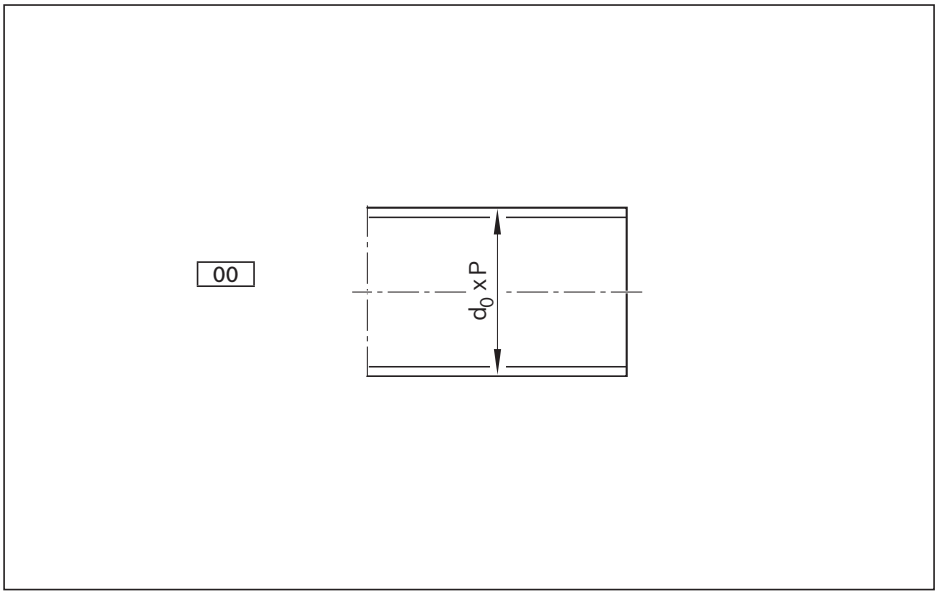

Option (machining of end face)	
K	None
Z	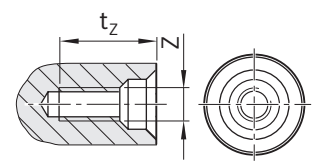

Ordering data:

BASA	25x10R x X	FEI-E-D - X	00	1	2	C5	R	00Z170	82Z170	1250	0	1

Form	Version	Size		(mm)					
				Centering hole		Hex socket		Thread	
		d_0	P	Z	t_Z	S	t_S	G	tg
	250	25	10	M8	19	10	10	M8	12
	250	28	10	M8	19	10	10	M8	12
	320	32	10/16	M10	22	12	12	M10	15
	400	40	10/12/16	M12	28	14	14	M12	18
	500	50	20	M16	36	17	17	M16	24
	800	80	20	M20	42	19	19	M24	36

Form L1

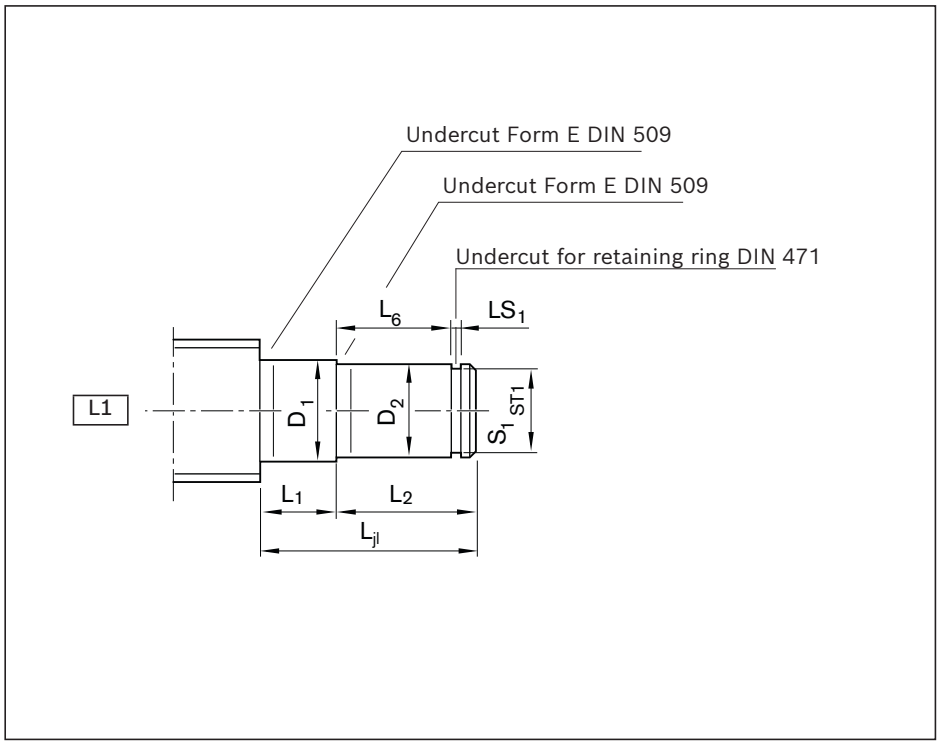

Option (machining of end face)	
K	None
Z	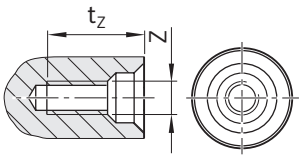

Ordering data:

BASA	25x10R x X	FEI-E-D - X	00	1	2	C5	R	L1Z170	82Z170	1250	0	1

Form	Version	(mm)										
		d_0	P	L_{jl}	D_1 h11	L_1	D_2 j6	L_2	L_6	S_1	S_{T1}	L_{S1} H13
L1	170	25	10	25	21.0	10	17	15	12	16.2	h11	1.1
	170	28	16	25	21.0	10	17	15	12	16.2	h11	1.1
	200	32	10/16	28	27.5	10	20	18	14	19.0	h11	1.30
	300	40	10/12/16	30	33.5	10	30	20	16	28.6	h12	1.60
	350	50	20	32	43.0	10	35	22	17	33.0	h12	1.60
	600	80	20	39	66.5	10	60	29	22	57.0	h12	2.15

End bearings for screw ends Form L1

Deep-groove ball bearing as per DIN 625

Retaining ring as per DIN 471

Version	Centering hole		Deep-groove ball bearing		Retaining ring	
	Z	t_z	Abbreviation	Part number	Abbreviation	Part number
170	M6	16.0	6203.2RS	R3414 050 00	17x1	R3410 749 00
170	M6	16.0	6203.2RS	R3414 050 00	17x1	R3410 749 00
200	M6	16.0	6204.2RS	R3414 038 00	20x1.2	R3410 735 00
300	M10	22.0	6206.2RS	R3414 051 00	30x1.5	R3410 724 00
350	M12	28.0	6207.2RS	R3414 075 00	35x1.5	R3410 725 00
600	M20	42.0	6212.2RS	R3414 078 00	60x2	R3410 764 00

Form 21

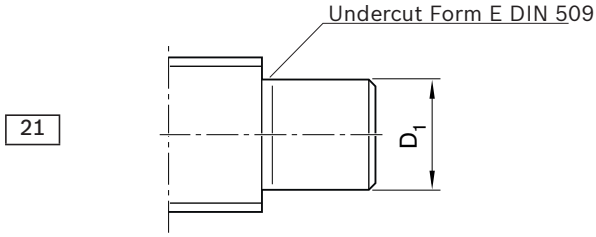

Option (machining of end face)	
K	None
Z	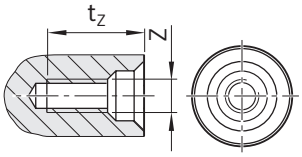

Ordering data:

BASA	25x10R x X	FEI-E-D - X	00	1	2	C5	R	21Z170	82Z170	1250	0	1

Form	Version	Size		(mm)			
						Centering hole	
		d_0	P	L_{jl}	D_1 j6	Z	t_Z
21	170	25	10	12	17	M6	16.0
	170	28	16	12	17	M6	16.0
	200	32	10/16	14	20	M6	16.0
	300	40	10/12/16	16	30	M10	22.0
	350	50	20	17	35	M12	28.0
	600	80	20	22	60	M20	42.0

End bearings
for screw ends in Form 21

Application

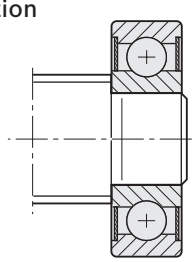

Separate technical dimensioning of the permissible drive torque is absolutely necessary.

Bearing assembly LAD

	Version	Bearing assembly (deep-groove ball bearing as per DIN 625) LAD	
		Abbreviation	Part number
	170	6203.2RS	R3414 050 00
	170	6203.2RS	R3414 050 00
	200	6204.2RS	R3414 038 00
	300	6206.2RS	R3414 051 00
	350	6207.2RS	R3414 075 00
	600	6212.2RS	R3414 078 00

Form 31

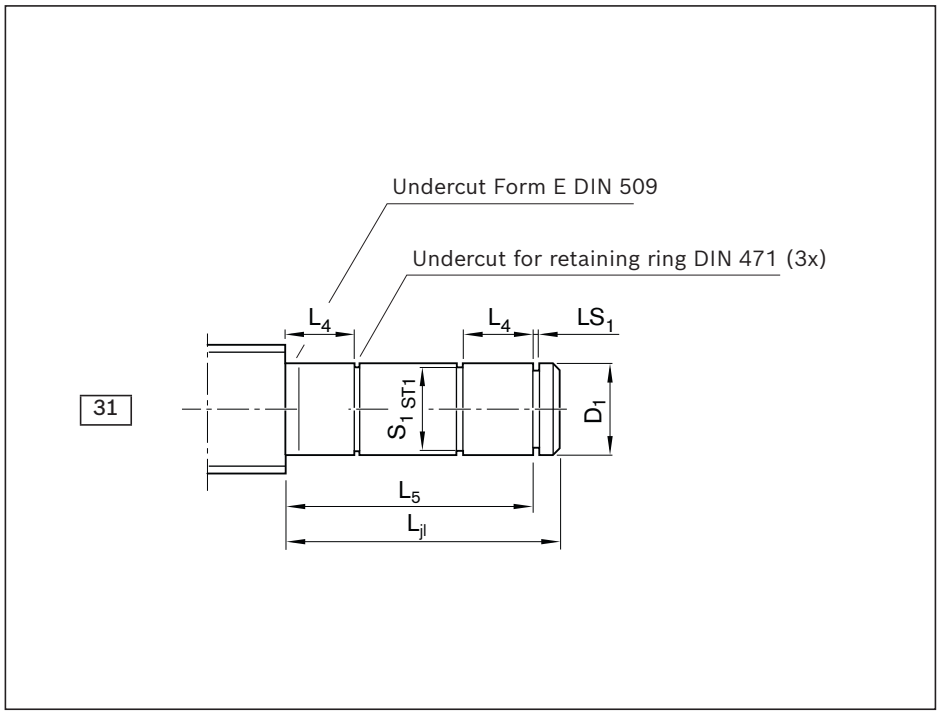

Option (machining of end face)	
K	None
Z	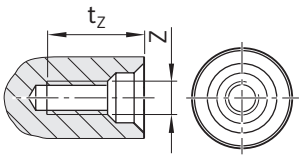

Ordering data:

BASA	25x10R x X	FEI-E-D - X	00	1	2	C5	R	31Z170	82Z170	1250	0	1

Form	Version	Size								
		d_0	P	L_{jl}	D_1 j6	L_4	L_5	S_1	ST1	LS_1 H13
31	170	25	10	51	17	12	48	16.2	h11	1.10
	170	28	16	51	17	12	48	16.2	h11	1.10
	200	32	10/16	60	20	14	56	19.0	h11	1.30
	300	40	10/12/16	68	30	16	64	28.6	h12	1.60
	350	50	20	73	35	17	68	33.0	h12	1.60
	600	80	20	95	60	22	88	57.0	h12	2.15

End bearings for screw ends in Form 31

Pillow block unit SES-L assembly

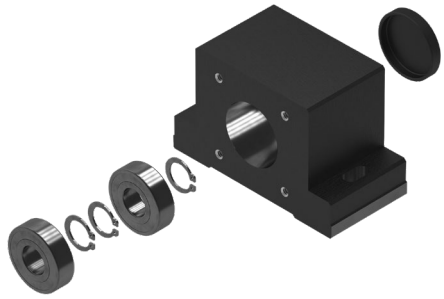

Application

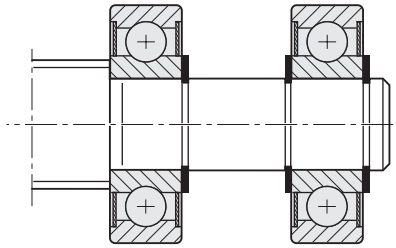

Bearing assembly LAD

	Version	Centering hole Z	t_Z	**Module** Pillow block unit SES-L Part number	Bearing LAD Part number
	170	M6	16.0	R1595 617 00	R1590 617 00
	170	M6	16.0	R1595 617 00	R1590 617 00
	200	M6	16.0	R1595 620 00	R1590 620 00
	300	M10	22.0	R1595 630 00	R1590 630 00
	350	M12	28.0	–	R1590 635 00
	600	M20	42.0	–	R1590 660 00

Form 41

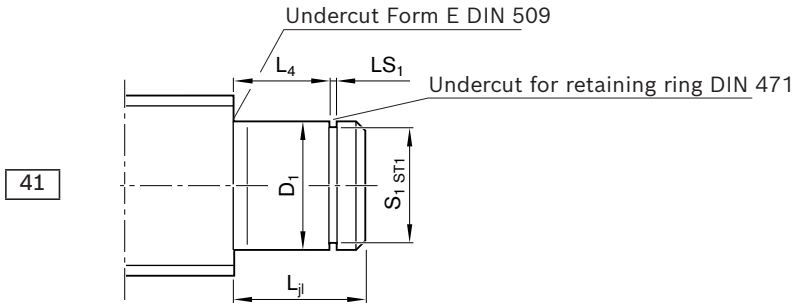

Option (machining of end face)	
K	None
Z	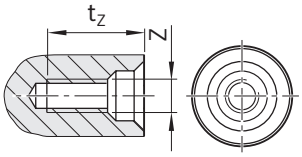

Ordering data:

BASA	25x10R x X	FEI-E-D - X	00	1	2	C5	R	41Z170	82Z170	1250	0	1

Form	Version	Size		(mm)					
		d_0	P	L_{jl}	D_1 j6	L_4	S_1	ST1	LS_1 H13
41	170	25	10	15	17	12	16.2	h11	1.10
	170	28	16	15	17	12	16.2	h11	1.10
	200	32	10/16	18	20	14	19.0	h11	1.30
	300	40	10/12/16	20	30	16	28.6	h12	1.60
	350	50	20	22	35	17	33.0	h12	1.60
	600	80	20	29	60	22	57.0	h12	2.15

End bearings for screw ends in Form 41

Pillow block unit SEB-L assembly

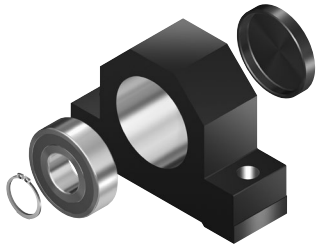

Application

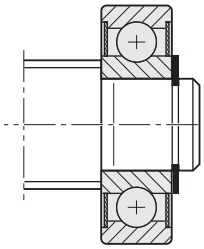

Bearing assembly LAD

Version	Centering hole Z	t_Z	Bearing assembly LAD Part number	Pillow block unit SEB-L Part number
170	M6	16.0	R1590 617 00	R1591 617 20
170	M6	16.0	R1590 617 00	R1591 617 20
200	M6	16.0	R1590 620 00	R1591 620 20
300	M10	22.0	R1590 630 00	R1591 630 20
350	M12	28.0	R1590 635 00	R1591 635 20
600	M20	42.0	R1590 660 00	R1591 660 20

Form 51, 52

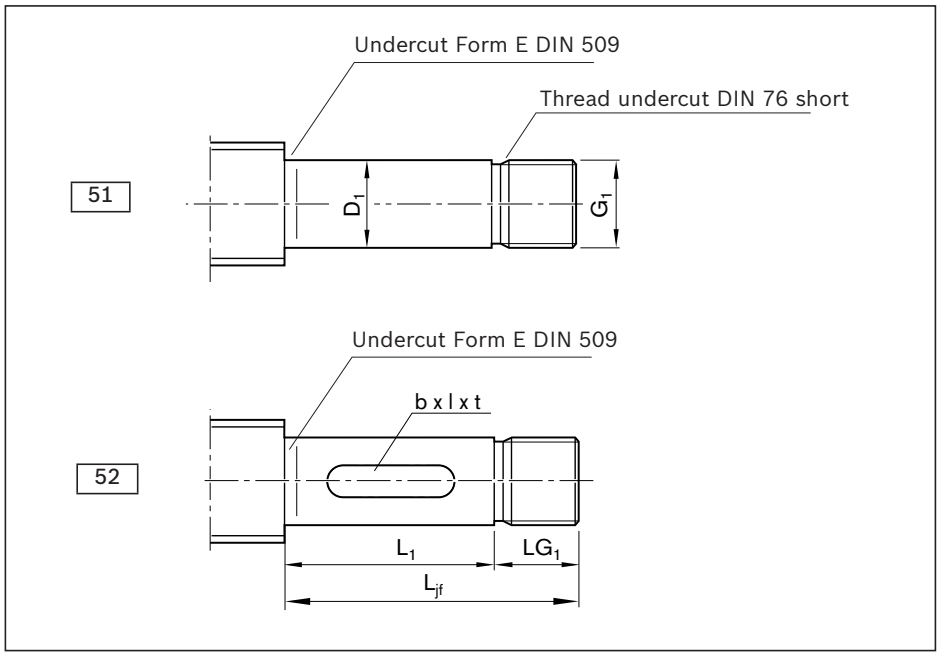

Option (machining of end face)	
K	None
Z	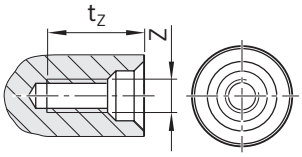

Ordering data:

BASA	25x10R x X	FEI-E-D - X	00	1	2	C5	R	52Z170	82Z170	1250	0	1

Form	Version	Size							Keyway as per DIN 6885		
		d_0	P	L_{jf}	D_1 h6	L_1	G_1	LG_1	b P9	l	t
51	170	25	10	45	17	23	M17x1	22	–	–	–
	170	28	16	45	17	23	M17x1	22	–	–	–
	200	32	10/16	48	20	26	M20x1	22	–	–	–
	300	40	10/12/16	51	30	25	M30x1.5	26	–	–	–
	301	50	20	80	30	54	M30x1.5	26	–	–	–
	500	80	20	84	50	52	M50x1.5	32	–	–	–
52	170	25	10	52	17	30	M17x1	22	5	25	3.0
	170	28	16	52	17	30	M17x1	22	5	25	3.0
	200	32	10/16	62	20	40	M20x1	22	6	28	3.5
	300	40	10/12/16	76	30	50	M30x1.5	26	8	36	4.0
	350	50	20	78	35	50	M35x1.5	28	10	40	5.0
	500	80	20	112	50	80	M50x1.5	32	14	63	5.5

End bearings for screw ends Form 51

Pillow block unit SEB-F assembly

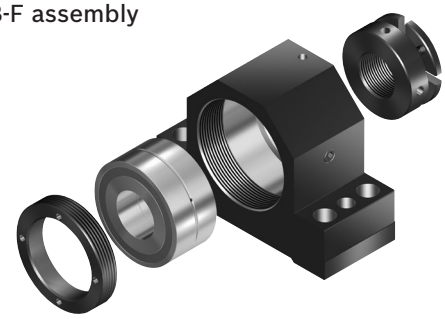

Application

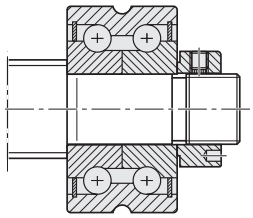

Separate technical dimensioning of the permissible drive torque is absolutely necessary.

Bearing assembly LAN

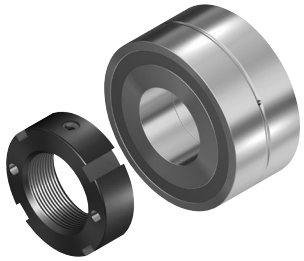

Bearing assembly LAF

	Version	Centering hole Z	tz	Module Pillow block unit SEB-F Part number	Bearing LAF Part number	Bearing LAN Part number
	170	M6	16	R1591 117 30	R1590 017 30	R1590 117 30
	170	M6	16	R1591 117 30	R1590 017 30	R1590 117 30
	200	M6	16	R1591 120 30	R1590 020 30	R1590 120 30
	300	M10	22	R1591 130 30	R1590 030 30	R1590 130 30
	301	M10	22	R1591 230 30	R1590 330 30	R1590 230 30
	500	M16	36	R1591 150 30	R1590 050 30	R1590 150 30
	170	M6	16	–	–	–
	170	M6	16	–	–	–
	200	M6	16	–	–	–
	300	M10	22	–	–	–
	350	M12	28	–	–	–
	500	M16	36	–	–	–

Form 81, 82

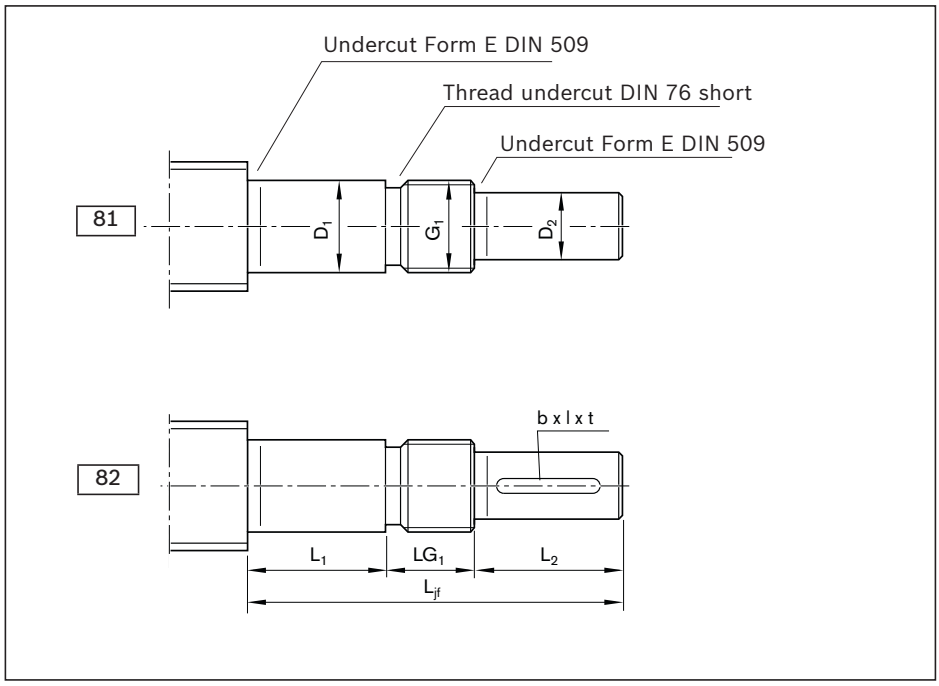

Option (machining of end face)	
K	None
Z	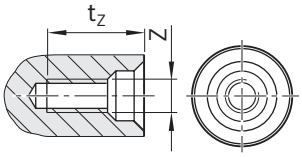

Ordering data:

BASA	25x10R x X	FEI-E-D - X	00	1	2	C5	R	81Z170	41Z170	1250	0	1

Form	Version	Size		(mm)								
		d_0	P	L_{jf}	D_1 h6	L_1	D_2 h7	L_2	G_1	LG_1	Centering hole Z	t_Z
81	170	25	10	75	17	23	15	30	M17x1	22	M5	12.5
	170	28	16	75	17	23	15	30	M17x1	22	M5	12.5
	200	32	10/16	88	20	26	18	40	M20x1	22	M6	16.0
	300	40	10/12/16	101	30	25	25	50	M30x1.5	26	M10	22.0
	306	50	20	130	30	54	25	50	M30x1.5	26	M10	22.0
	500	80	20	154	50	52	40	70	M50x1.5	32	M16	36.0
82	170	25	10	75	17	23	15	30	M17x1	22	M5	12.5
	170	28	16	75	17	23	15	30	M17x1	22	M5	12.5
	200	32	10/16	88	20	26	18	40	M20x1	22	M6	16.0
	300	40	10/12/16	101	30	25	25	50	M30x1.5	26	M10	22.0
	306	50	20	130	30	54	25	50	M30x1.5	26	M10	22.0
	500	80	20	154	50	52	40	70	M50x1.5	32	M16	36.0

End bearings for screw ends Form 81, 82

Pillow block unit
SEB-F assembly

Pillow block unit
SES-F assembly

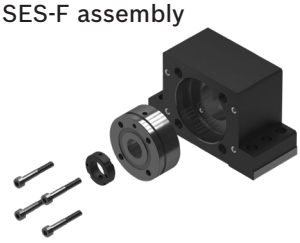

Application

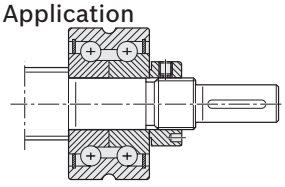

Separate technical dimensioning of the permissible drive torque is absolutely necessary.

Bearing assembly LAF

Bearing assembly LAN

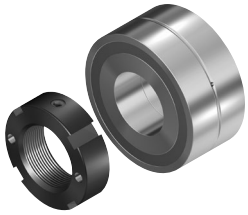

Version	Wrench size SW	b_{SW}	l_{SW}	Pillow block unit for motor attachment: SEB-F Part number	SES-F Part number	Bearing assembly: LAF Part number	LAN Part number
170	–	–	–	R1591 117 30	R1595 017 20	R1590 017 30	R1590 117 30
170	–	–	–	R1591 117 30	R1595 017 20	R1590 017 30	R1590 117 30
200	–	–	–	R1591 120 30	–	R1590 020 30	R1590 120 30
300	–	–	–	R1591 130 30	–	R1590 030 30	R1590 130 30
306	–	–	–	R1591 230 30	–	R1590 330 30	R1590 230 30
500	–	–	–	R1591 150 30	–	R1590 050 30	R1590 150 30
170	19	10	42.0	R1591 117 30	R1595 017 20	R1590 017 30	R1590 117 30
170	19	10	42.0	R1591 117 30	R1595 017 20	R1590 017 30	R1590 117 30
200	24	15	10.5	R1591 120 30	–	R1590 020 30	R1590 120 30
300	30	15	12.5	R1591 130 30	–	R1590 030 30	R1590 130 30
306	41	22	15.5	R1591 230 30	–	R1590 330 30	R1590 230 30
500	60	27	18.5	R1591 150 30	–	R1590 050 30	R1590 150 30

Overview

Rexroth offers an extensive range of accessories for ball screw assemblies.
These include pillow block units, bearings and slotted nuts.
A reasonable ratio of the load capacities of the bearing and the ball screw drive should be taken into account when dimensioning. Further information is provided in this section.

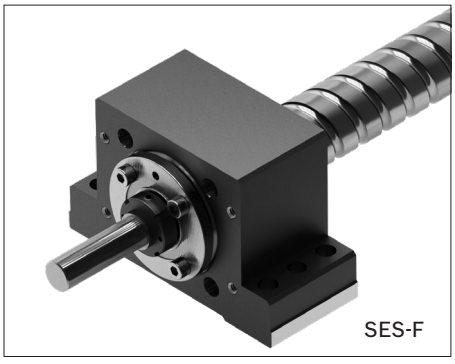
SES-F

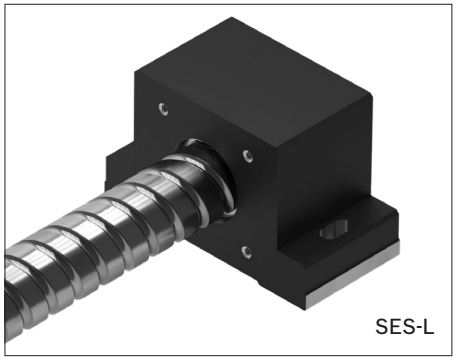
SES-L

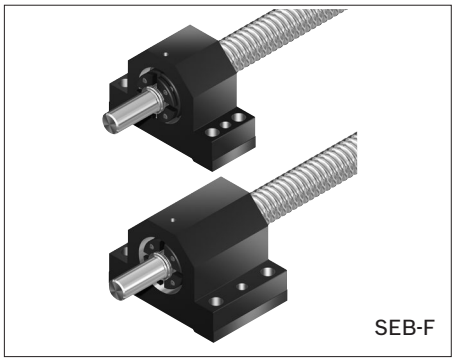
SEB-F

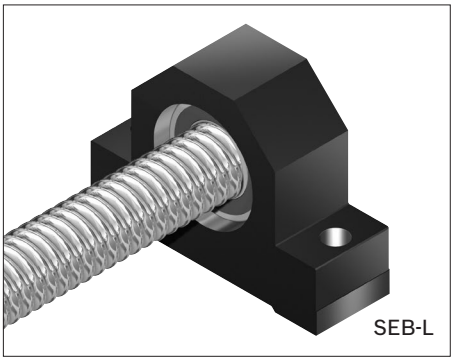
SEB-L

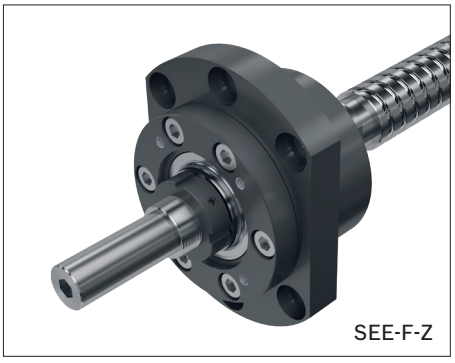
SEE-F-Z

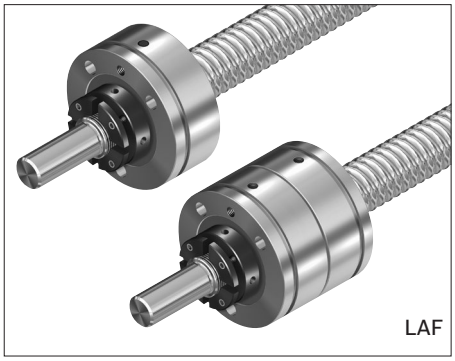
LAF

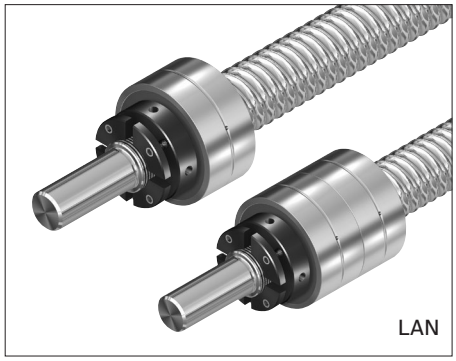
LAN

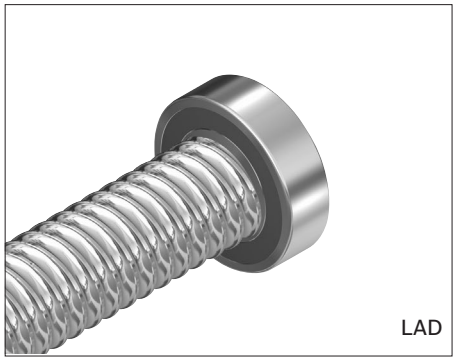
LAD

LAS

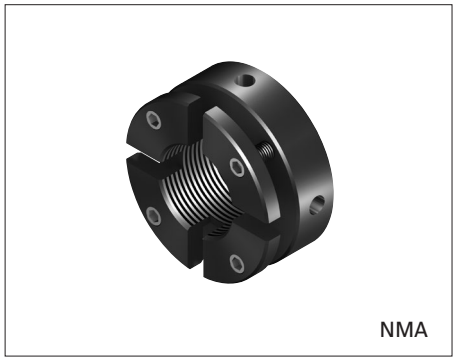
NMA

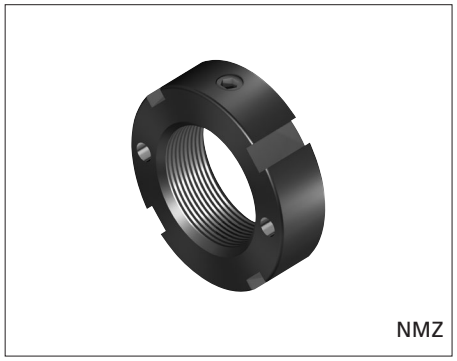
NMZ

Pillow block unit SES-F assembly, steel

Fixed bearing with angular-contact thrust ball bearing LGF-B-..., LGF-C-...

The pillow block unit consists of:
- Precision pillow block housing made of steel with reference edges on both sides
- Angular-contact thrust ball bearing LGF...
- Slotted nut NMZ

The slotted nut is delivered unmounted.

Separate technical dimensioning to determine the limit values is absolutely necessary for all attachments (e.g. pillow block units, bearing assembly, etc.)

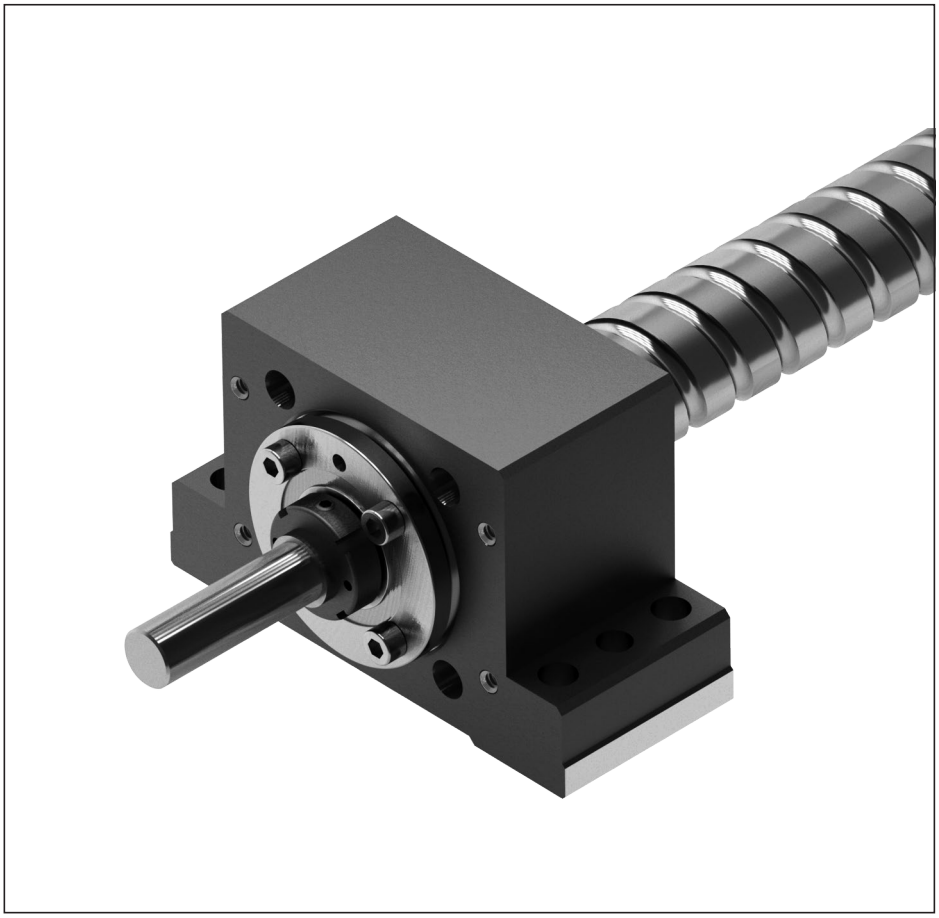

Size	Complete pillow block	Angular-contact thrust ball bearing						Slotted nut		Weight complete
		Load ratings (axial)		(mm)			Abbreviation		Abbreviation	
		dyn. C	stat. C_0					M_A		
d_0 x P	Part number	(N)	(N)	d	D	B		(Nm)		(kg)
25x10	R1595 017 20	18,800	31,000	17	62	25	LGF-B-1762	15	NMZ 17x1	3.38
32x10/16	R1595 020 20	26,000	47,000	20	68	28	LGF-B-2068	18	NMZ 20x1	4.31
40x5	R1595 030 20	29,000	64,000	30	80	28	LGF-B-3080	32	NMZ 30x1.5	6.31
40x10/12/16	R1595 330 20	47,500	127,000	30	80	56	LGF-C-3080	32	NMZ 30x1.5	7.53

Screw end Form 81, 82 designed for motor mounting.

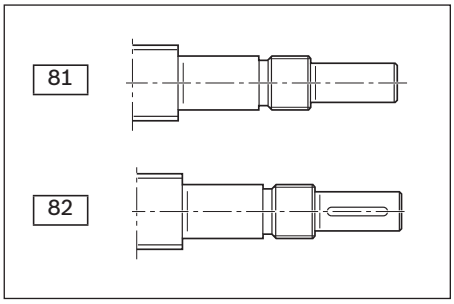

Further information on the bearing pair can be found on page 62.

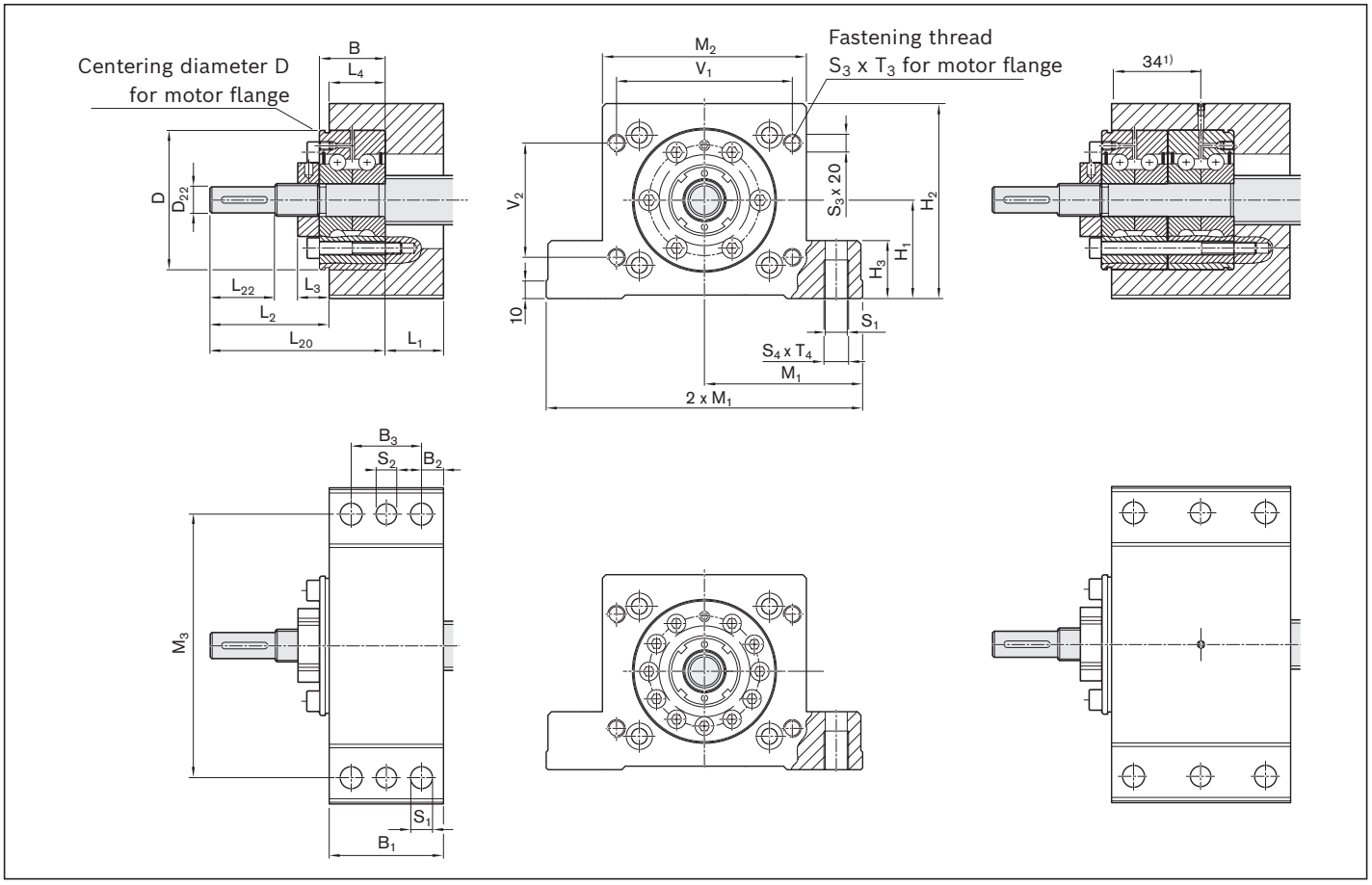

Size d_0xP	B_1	B_2	B_3	L_1	L_2	L_3	L_4	L_{20}	L_{22}	D_{22}	M_1	M_2	M_3	H_1	H_2	H_3	S_1	S_2	S_3	S_4	T_3	T_4	V_1	V_2
25x10	60	10.0	40	42	57	17	18	75	30	15	72.5	80	120	41	81	28	10.5	9.7	M8	M12	20	20	66	50
32x10/16	60	10.0	40	40	58	18	20	78	35	16	72.5	103	120	46	91	28	10.5	9.7	M8	M12	20	20	90	46
40x5	65	12.5	40	45	73	20	20	93	50	25	90.0	116	150	56	111	33	12.5	11.7	M10	M14	20	22	100	65
40x10/12/16	85	12.5	60	37	82	20	48	130	50	25	90.0	116	150	56	111	33	12.5	11.7	M10	M14	20	22	100	65

Pillow block unit SES-L assembly, steel

Floating bearing with DIN 625 deep-groove ball bearing

The pillow block unit consists of:
- Precision pillow block housing made of steel with reference edges on both sides
- Deep-groove ball bearing as per DIN 625
- Retaining ring DIN 471
- Cover

All parts are delivered unmounted.

Separate technical dimensioning to determine the limit values is absolutely necessary for all attachments (e.g. pillow block units, bearing assembly, etc.)

Size	Complete pillow block	Deep-groove ball bearing as per DIN 625						Retaining ring as per DIN 471	Weight complete
		Load ratings (radial)					Designation DIN 625...		
d_0 x P	Part number	dyn. C (N)	stat. C_0 (N)	d	D	B			(kg)
25x10	R1595 617 00	9,500	4,150	17	40	12	6203.2RS	17x1	3.39
32x10/16	R1595 620 00	12,700	5,700	20	47	14	6204.2RS	20x1.2	4.74
40x10/12/16	R1595 630 00	19,300	9,800	30	62	16	6206.2RS	30x1.5	7.30

Suitable for screw ends: Form

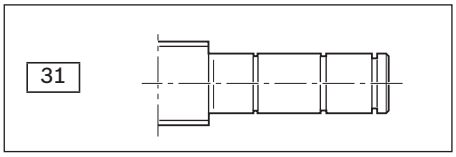

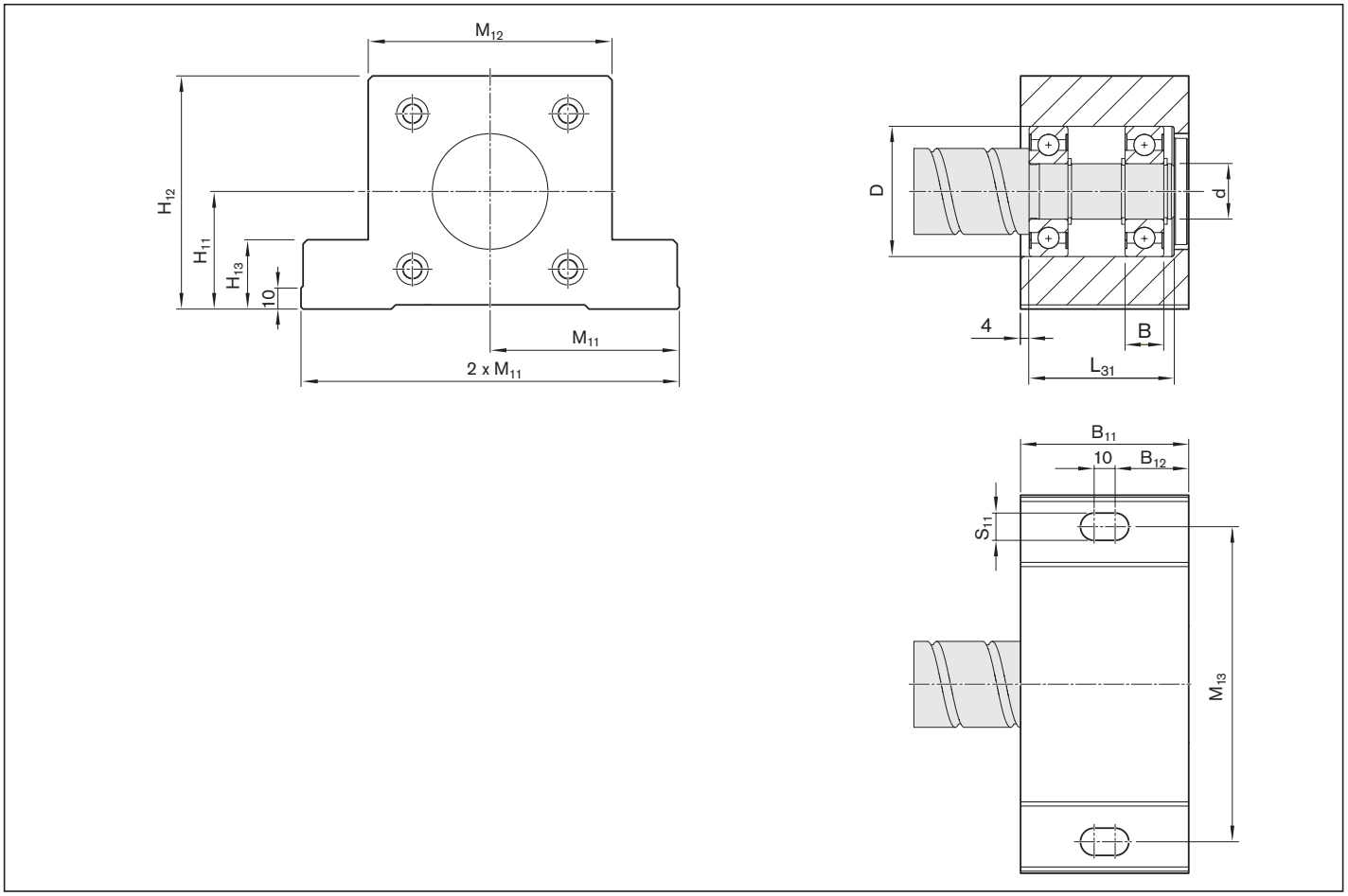

Size d_0 x P	B_{11}	B_{12}	L_{31}	M_{11} ±0.015	M_{12}	M_{13}	H_{11} ±0.015	H_{12}	H_{13}	S_{11}
25x10	64	27.0	51	72.5	80	120	41	81	28	10.5
32x10/16	70	30.0	60	72.5	103	120	46	91	28	10.5
40x10/12/16	80	35.0	68	90.0	116	150	56	111	33	13.0

Pillow block unit SEB-F assembly

Fixed bearing with angular-contact thrust ball bearing LGN-B-... LGN-C-...

The pillow block unit consists of:
- Precision pillow block housing made of steel with reference edges on both sides
- Angular-contact thrust ball bearing LGN
- Slotted nut NMA or NMZ
- Ring nut GWR

The slotted nut is delivered mounted.

Separate technical dimensioning to determine the limit values is absolutely necessary for all attachments (e.g. pillow block units, bearing assembly, etc.)

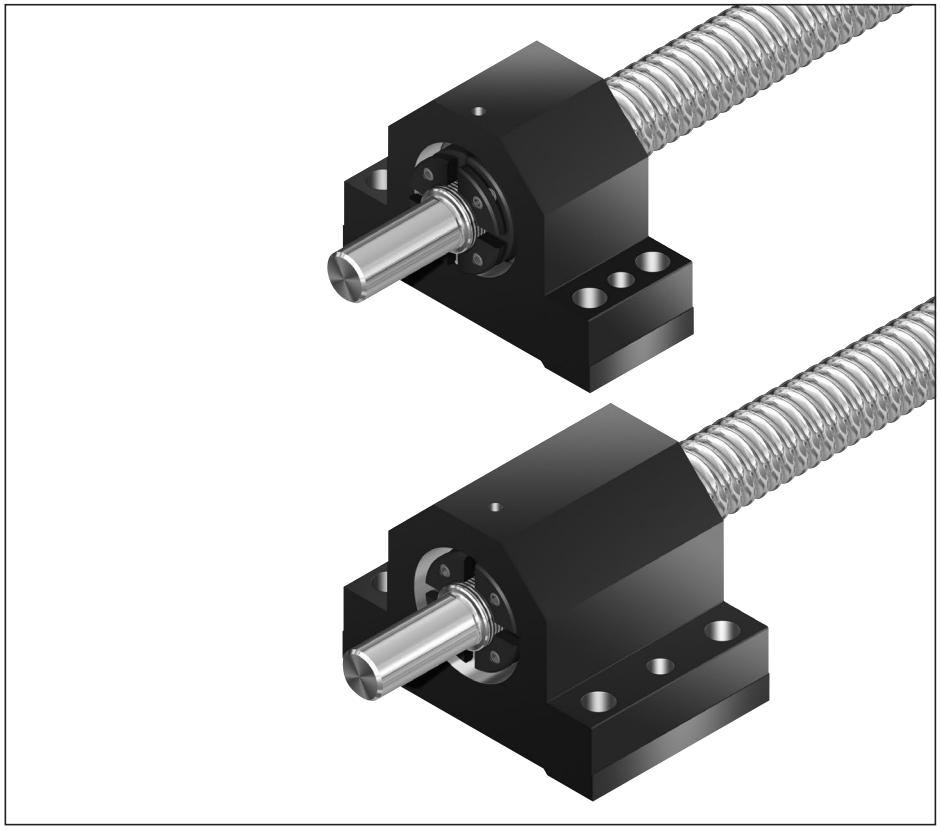

Size	Complete pillow block	Angular-contact thrust ball bearing						Slotted nut		Weight
		Load ratings (axial)		Dimensions			Abbreviation		Abbreviation	complete
d_0 x P	Part number	dyn. C (N)	stat. C_0 (N)	d	D	B		M_A (Nm)		(kg)
25 x 10/28 x 16	R1591 117 20	18,800	31,000	17	47	25	LGN-B-1747	15.0	NMZ 17x1	1.65
25 x 10/28 x 16	R1591 117 30	18,800	31,000	17	47	25	LGN-B-1747	15.0	NMA 17x1	1.69
32 x 10/16	R1591 120 20	26,000	47,000	20	52	28	LGN-B-2052	18.0	NMZ 20x1	1.93
32 x 10/16	R1591 120 30	26,000	47,000	20	52	28	LGN-B-2052	18.0	NMA 20x1	2.03
40 x 10/12/16	R1591 225 30	44,500	111,000	25	57	56	LGN-C-2557	25.0	NMA 25x1.5	5.13
50 x 20	R1591 230 30	47,500	127,000	30	62	56	LGN-C-3062	32.0	NMA 30x1.5	7.04
80 x 20	R1591 150 30	113,000	250,000	50	110	54	LGN-A-50110	85.0	NMA 50x1.5	15.61

Suitable for screw ends: Form

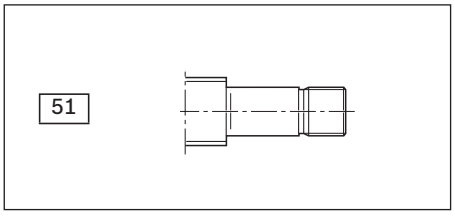

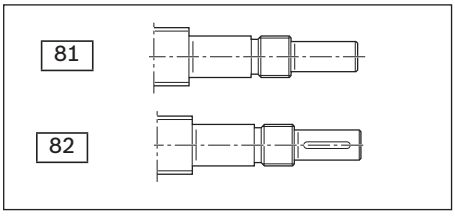

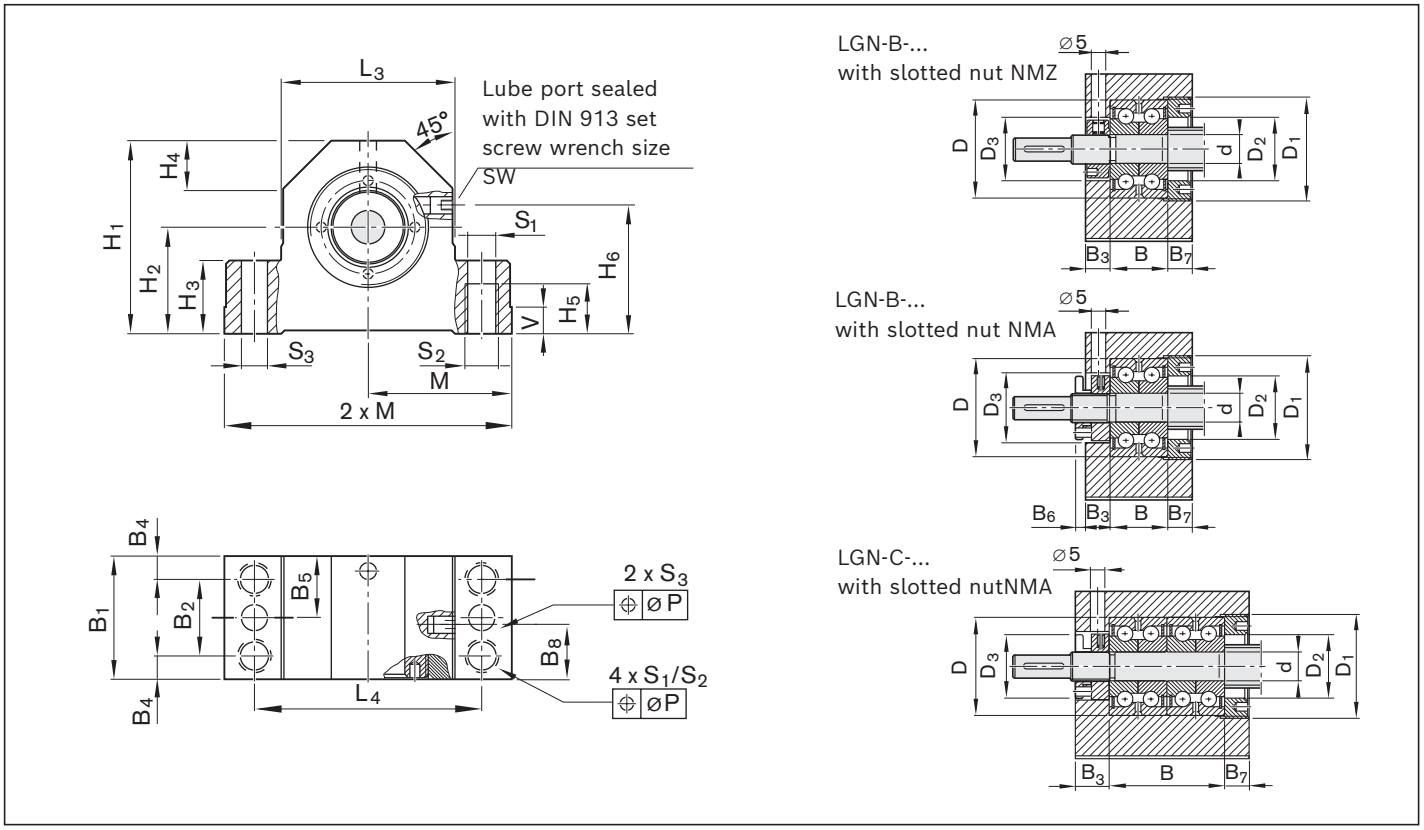

Size	(mm)																									
d_0 x P	M js7	L_3	L_4	H_1	H_2 ±0.02	H_3	H_4	H_5	H_6	B_1	B_2	B_3	B_4	B_5	B_6	B_7	B_8	V	S_1 H12	S_2	S_3	SW	D_1	D_2	D_3	P
25 x 10/28 x 16	54.0	66	88	72	39	27	18	18	45	46	29	10.5	8.5	23.0	–	10.5	23.0	10	10.5	M12	9.7	4	M50x1.5	31.0	36	0.20
25 x 10/28 x 16	54.0	66	88	72	39	27	18	18	45	46	29	10.5	8.5	23.0	7.5	10.5	23.0	10	10.5	M12	9.7	4	M50x1.5	31.0	36	0.20
32 x 10/16	56.0	70	92	77	42	27	19	18	48	49	29	10.5	10.0	24.5	–	10.5	24.5	10	10.5	M12	9.7	4	M55x1.5	36.0	42	0.20
32 x 10/16	56.0	70	92	77	42	27	19	18	48	49	29	10.5	10.0	24.5	7.5	10.5	24.5	10	10.5	M12	9.7	4	M55x1.5	36.0	42	0.20
40 x 10/12/16	63.0	80	105	98	58	32	23	21	64	89	62	20.5	13.5	44.5	–	12.5	54.5	12	12.6	M14	9.7	4	M62x1.5	43.0	48	0.20
50 x 20	72.0	92	118	112	65	38	25	22	70	92	65	20.5	13.5	46.0	–	15.5	57.5	12	12.5	M14	9.7	4	M78x2	54.0	53	0.20
80 x 20	102.5	145	175	165	93	50	40	36	98	98	58	25.5	20.0	49.0	–	18.5	45.5	16	17.3	M20	11.7	4	M115x2	85.0	90	0.20

Pillow block unit SEB-L assembly

Floating bearing with DIN 625 deep-groove ball bearing

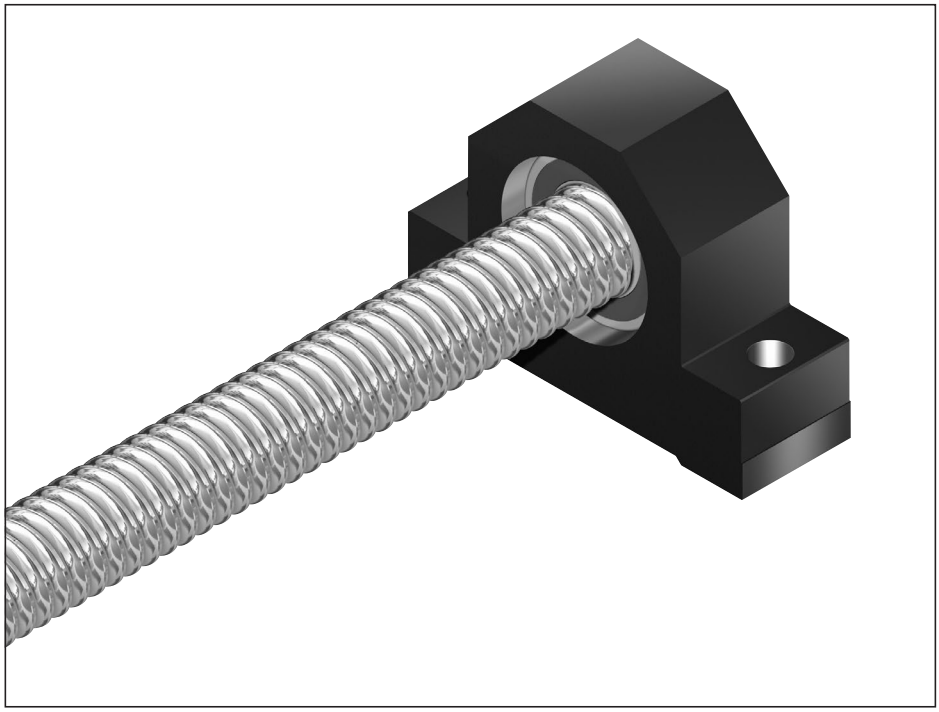

The pillow block unit consists of:
- Precision pillow block housing made of steel with reference edge on one side
- Deep-groove ball bearing as per DIN 625
- Retaining ring DIN 471
- Cover

All parts are delivered unmounted.

Separate technical dimensioning to determine the limit values is absolutely necessary for all attachments (e.g. pillow block units, bearing assembly, etc.)

Size	Complete pillow block	Deep-groove ball bearing as per DIN 625						Retaining ring as per DIN 471	Weight complete
		Load ratings (radial)					Designation DIN 625...		
		dyn. C	stat. C_0						
d_0 x P	Part number	(N)	(N)	d	D	B			(kg)
25 x 10/28 x 16	R1591 617 20	9,500	4,150	17	40	12	6203.2RS	17x1	0.96
32 x 10/16	R1591 620 20	12,700	5,700	20	47	14	6204.2RS	20x1.2	1.24
40 x 10/12/16	R1591 630 10	19,300	9,800	30	62	16	6206.2RS	30x1.5	1.82
50 x 20[1)]	R1591 635 20	25,500	13,200	35	72	17	6207.2RS	35x1.5	2.87
80 x 20[1)]	R1591 660 20	52,000	31,000	60	110	22	6212.2RS	60x2	7.09

1) without cover

Suitable for screw ends: Form

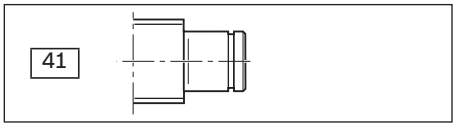

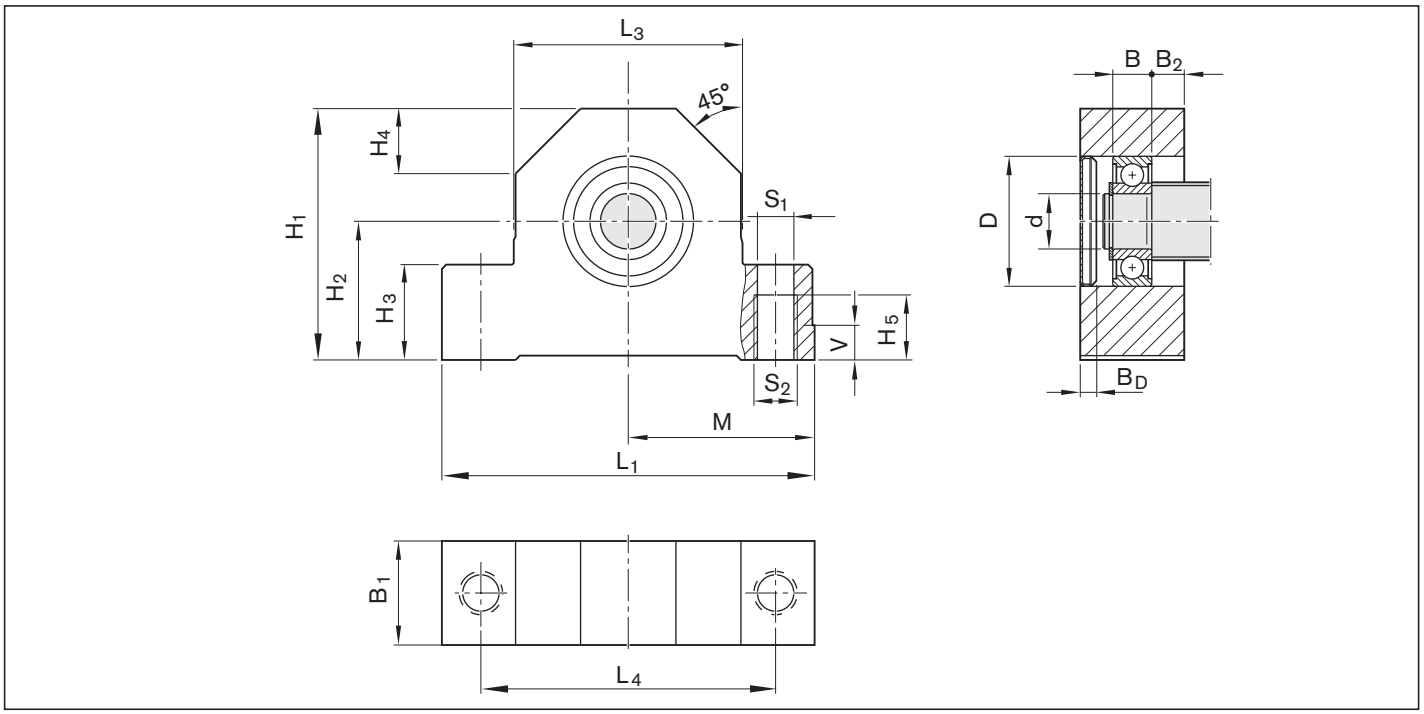

Size d_0 x P	L_1	L_3	L_4	H_1	H_2 ±0.02	H_3	H_4	H_5	B_1	B_2	M js7	V	S_1 H12	S_2	Cover B_D
25 x 10/28 x 16	108	66	88	72	39	27	19	18	28	8.0	54.0	10	10.5	M12	3.7
32 x 10/16	112	70	92	77	42	27	20	18	34	10.0	56.0	10	10.5	M12	4.8
40 x 10/12/16	126	80	105	98	58	32	23	21	38	11.0	63.0	12	12.6	M14	4.5
50 x 20	144	92	118	112	65	38	25	22	41	12.0	72.0	12	12.5	M14	–
80 x 20	205	145	175	165	93	50	40	36	50	14.0	102.5	16	17.3	M20	–

Flange bearing assembly SEE-F-Z

Fixed bearing with angular-contact thrust ball bearing

The bearing assembly consists of:
- precision flanged housing made of steel
- 2 pre-tensioned angular-contact thrust ball bearings
- Slotted nut
- Cover
- Radial shaft seal

Separate technical dimensioning to determine the limit values is absolutely necessary for all attachments (e.g. pillow block units, bearing assembly, etc.)

Size	Complete pillow block	Angular-contact thrust ball bearing						Slotted nut
d_0	Part number	dyn. C (N)	stat. C_0 (N)	max. axial load (N)	(mm) d	D	B	M_A (Nm)
25/28	R159751700	25,900	40,500	32,000	17	47	30	15
32	R159752000	25,900	40,500	32,000	20	47	30	18
40	R159752500	29,900	58,500	46,400	25	62	30	25
40	R159753000	29,900	58,500	46,400	30	62	30	32

Form	Version[1)]	Size									Centering Hole		Hex Socket		Threat	
		d_0	P	L_{jf}	D_1 h6	L_1	D_2 h7	L_2	G_1	LG_1	Z	t_Z	S	t_S	G	t_g
81	176	25/28	10	110.0	17	58.0	12	29.0	M17x1	23.0	M4	10.0	4	4	M5	8
	207	32	10/16	120.0	20	58.0	15	39.0	M20x1	23.0	M5	12.0	4	4	M6	9
	252	40	10/12/16	140.0	25	63.0	20	51.0	M25x1.5	26.0	M6	16.0	5	5	M8	12
	311	40	10/12/16	150.0	30	63.0	25	61.0	M30x1.5	26.0	M10	22.0	8	8	M10	15

1) The allocation of screw ends to the bearing assemblies is clearly defined by the version

Suitable for screw ends: Form

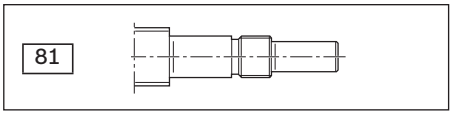

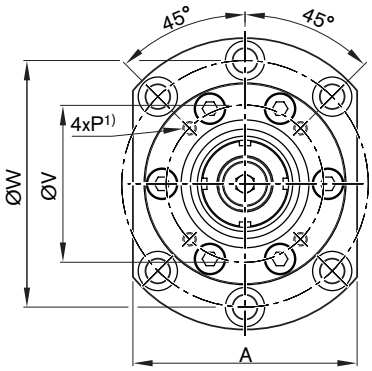

SEE-F-Z 17 – 30

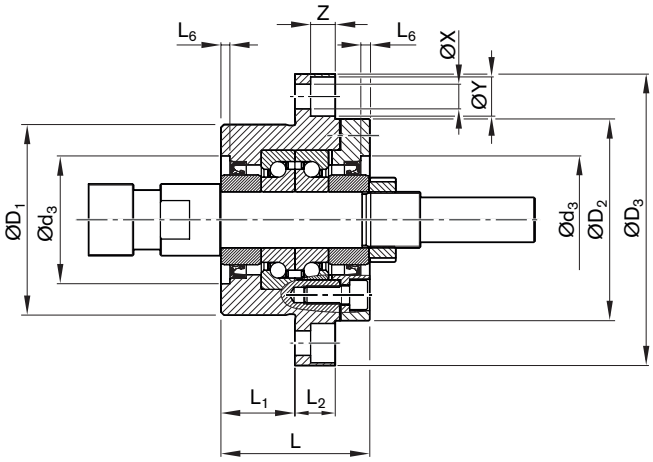

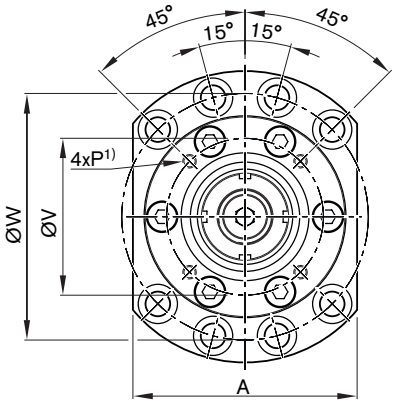

SEE-F-Z 40

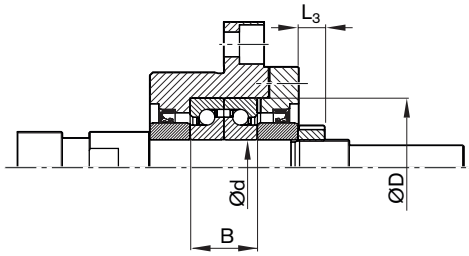

1) Depth Q

Size																		Weight complete m
d_0	D_1 g6	D_2	D_3	L	L_1	L_2	L_3	A	d_3 H8	L_6	W	X	Y	Z	V	P	Q	
25/28	70	72	106	60	32	15	10	80	45	3	88	9	14.0	8.5	58	M5	10	1.84
32	70	72	106	60	32	15	10	80	45	3	88	9	14.0	8.5	58	M5	10	1.81
40	85	90	130	66	33	18	12	100	57	4	110	11	17.5	11.0	70	M6	12	3.13
40	85	90	130	66	33	18	12	100	57	4	110	11	17.5	11.0	70	M6	12	3.03

Bearing assembly LAF

Fixed bearing with angular-contact thrust ball bearing LGF

Double-thrust, screw-down,
series LGF-B-...
LGF-A-...
Double-thrust, screw-on,
Series LGF-C-...

The fixed bearing consists of:
- Angular-contact thrust ball bearing LGF
- Slotted nut NMA..., NMZ...

Separate technical dimensioning to determine the limit values is absolutely necessary for all attachments (e.g. pillow block units, bearing assembly, etc.)

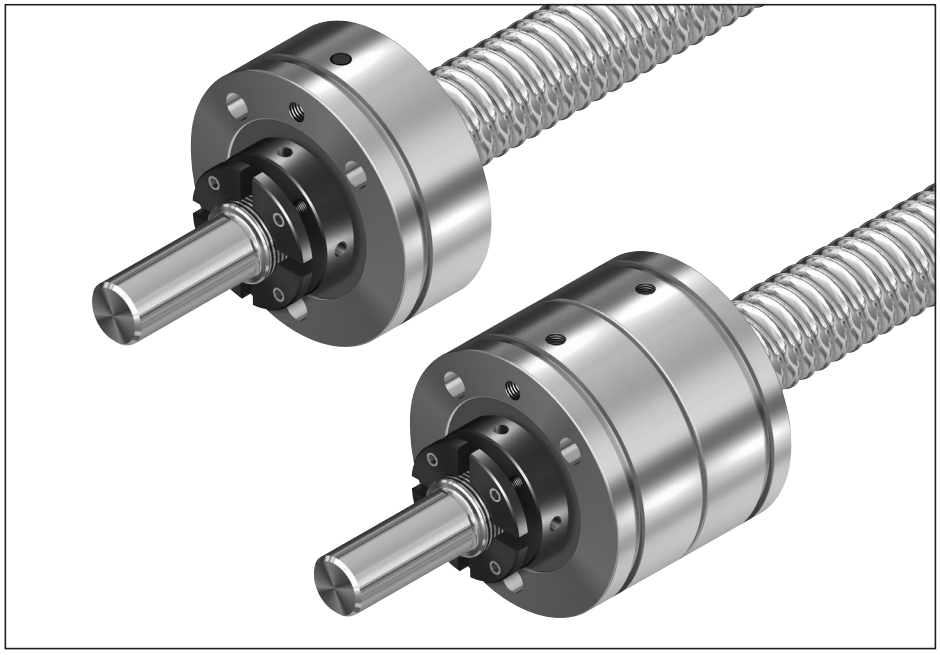

Size	Module	Single parts				Weight complete
		Angular-contact thrust ball bearing		Slotted nut		
d_0 x P	Part number	Abbreviation	Part number	Abbreviation	Part number	(kg)
25 x 10	R1590 017 00	LGF-B-1762	R3414 010 06	NMZ 17x1	R3446 004 04	0.485
28 x 16	R1590 017 30			NMA 17x1	R3446 014 04	0.520
32 x 10/16	R1590 020 00	LGF-B-2068	R3414 001 06	NMZ 20x1	R3446 005 04	0.645
	R1590 020 30			NMA 20x1	R3446 015 04	0.740
40 x 5	R1590 030 00	LGF-B-3080	R3414 011 06	NMZ 30x1.5	R3446 006 04	0.855
	R1590 030 30			NMA 30x1.5	R3446 016 04	0.980
40 x 10/12/16	R1590 325 30	LGF-C-2575	R3414 015 06	NMA 25x1.5	R3446 011 04	1.600
50 x 5	R1590 035 30	LGF-B-3590	R3414 026 06	NMA 35x1.5	R3446 012 04	1.360
50 x 20	R1590 330 30	LGF-C-3080	R3414 027 06	NMA 30x1.5	R3446 016 04	1.760
80 x 20	R1590 050 30	LGF-A-50140	R3414 029 06	NMA 50x1.5	R3446 019 04	5.130

Size	Load ratings[1)]		Bearing friction torque with sealing disk	Rigidity (axial)	Rigidity against tilting	Limit speed (grease)
	dyn. C	stat. C_0	M_{RL}	R_{fb}	R_{kl}	n_G
d_0 x P	(N)	(N)	(Nm)	(N/µm)	(Nm/mrad)	(rpm)
25 x 10 28 x 16	18,800	31,000	0.24	450	80	3,300
32 x 10/16	26,000	47,000	0.30	650	140	3,000
40 x 5	29,000	64,000	0.50	850	300	2,200
40 x 10/12/16	44,500	111,000	0.60	1 300	450	2,600
50 x 5	41,000	89,000	0.60	900	400	2,000
50 x 20	47,500	127,000	0.75	1 500	620	2,200
80 x 20	113,000	250,000	2.60	1 400	1 500	1,200

1) See page 99 for load on bearing

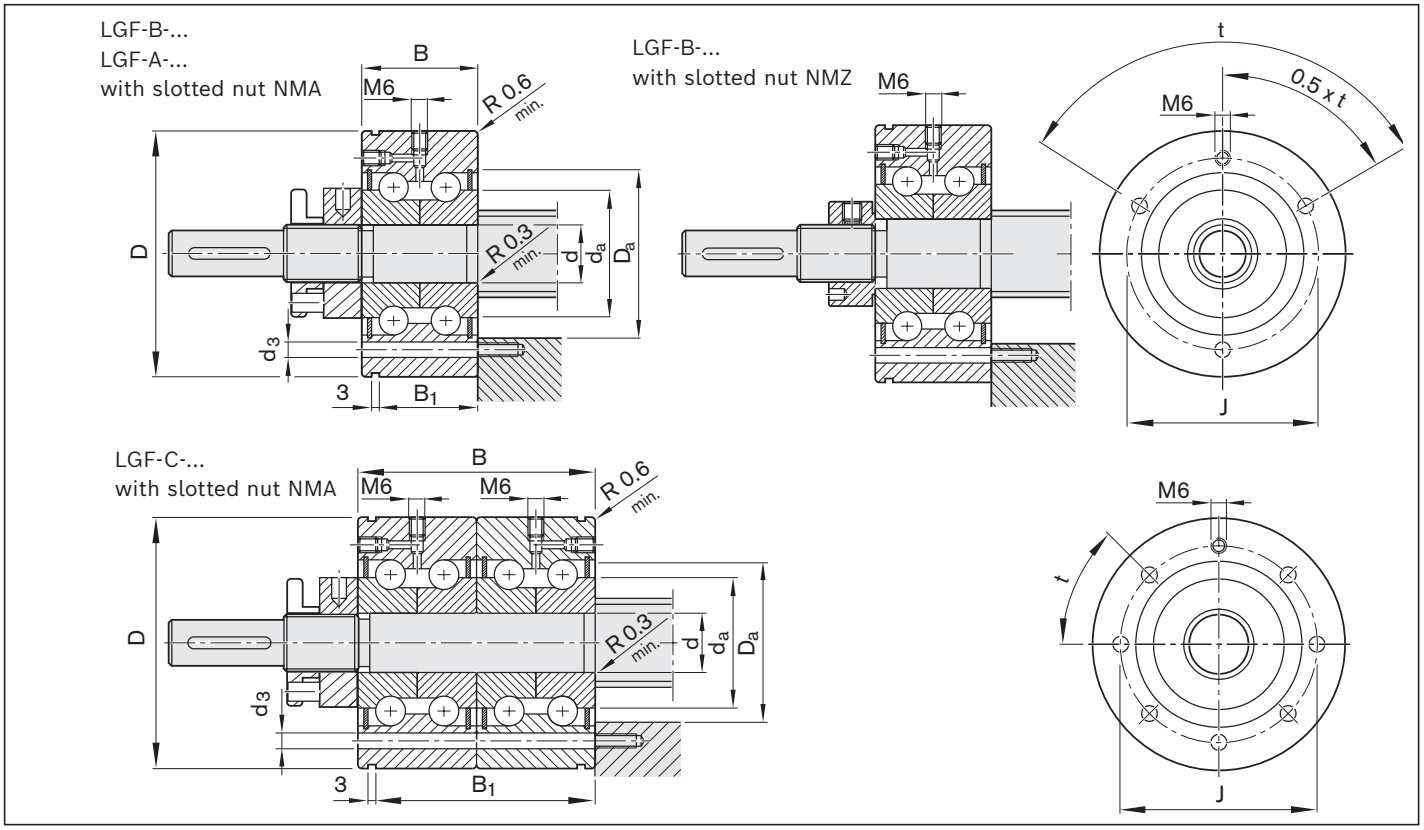

Size	Dimensions (mm)				Mounting dimensions (mm)					Mounting holes		
	d	D	B	B_1	J	D_a		d_a		Minimum	d_3	t
d_0 x P						min	max	min	max	number[1)]	(mm)	(°)
25 x 10 28 x 16	$17_{-0.010}$	$62_{-0.013}$	$25_{-0.25}$	17	48	34	37	23	33	3	6.8	120
32 x 10/16	$20_{-0.010}$	$68_{-0.013}$	$28_{-0.25}$	19	53	40	43	25	39	4	6.8	90
40 x 5	$30_{-0.010}$	$80_{-0.013}$	$28_{-0.25}$	19	63	50	53	40	49	6	6.8	60
40 x 10/12/16	$25_{-0.005}$	$75_{-0.010}$	$56_{-0.50}$	47	58	45	48	32	44	7	6.5	45
50 x 5	$35_{-0.010}$	$90_{-0.015}$	$34_{-0.25}$	25	75	59	62	45	58	4	8.8	90
50 x 20	$30_{-0.005}$	$80_{-0.010}$	$56_{-0.50}$	47	63	50	53	40	49	11	6.5	30
80 x 20	$50_{-0.005}$	$140_{-0.010}$	$54_{-0.25}$	45	113	88	100	63	87	12	10.5	30

1) The number of mounting holes can vary upwards

Suitable for screw ends: Form

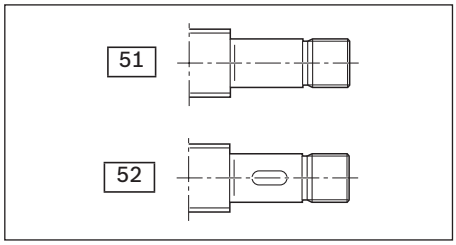

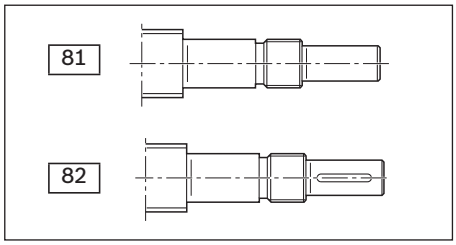

Bearing assembly LAN

Fixed bearing with angular-contact thrust ball bearing LGN

Double-thrust
Series LGN-B-...
LGN-A-...
Double-thrust, in pairs,
Series LGN-C-...

The fixed bearing consists of:
- Angular-contact thrust ball bearing LGN
- Slotted nut NMA..., NMZ...

Separate technical dimensioning to determine the limit values is absolutely necessary for all attachments (e.g. pillow block units, bearing assembly, etc.)

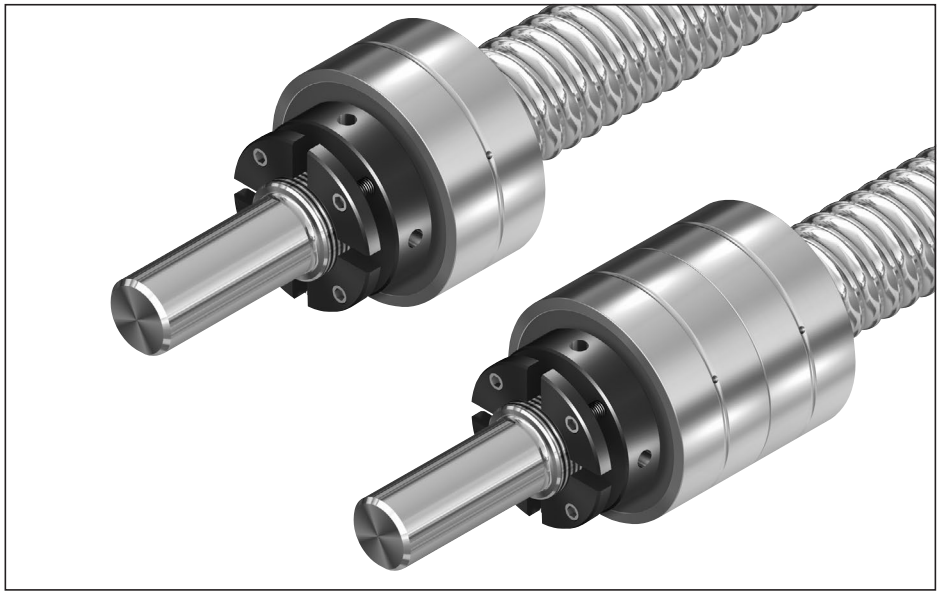

Size	Module	Single parts				Weight complete
		Angular-contact thrust ball bearing		Slotted nut		
d_0 x P	Part number	Abbreviation	Part number	Abbreviation	Part number	(kg)
25 x 10	R1590 117 00	LGN-B-1747	R3414 005 06	NMZ 17x1	R3446 004 04	0.248
28 x 16	R1590 117 30			NMA 17x1	R3446 014 04	0.290
32 x 10/16	R1590 120 00	LGN-B-2052	R3414 006 06	NMZ 20x1	R3446 005 04	0.345
	R1590 120 30			NMA 20x1	R3446 015 04	0.440
40 x 5	R1590 130 00	LGN-B-3062	R3414 007 06	NMZ 30x1.5	R3446 006 04	0.465
	R1590 130 30			NMA 30x1.5	R3446 016 04	0.590
40 x 10/12/16	R1590 225 30	LGN-C-2557	R3414 014 06	NMA 25x1.5	R3446 011 04	0.840
50 x 5	R1590 135 30	LGN-B-3572	R3414 022 06	NMA 35x1.5	R3446 012 04	0.740
50 x 20	R1590 230 30	LGN-C-3062	R3414 023 06	NMA 30x1.5	R3446 016 04	0.980
80 x 20	R1590 150 30	LGN-A-50110	R3414 025 06	NMA 50x1.5	R3446 019 04	2.930

Size	Load ratings[1)]		Bearing friction torque with sealing disk	Rigidity (axial)	Rigidity against tilting	Limit speed (grease)
	dyn. C	stat. C_0	M_{RL}	R_{fb}	R_{kl}	n_G
d_0 x P	(N)	(N)	(Nm)	N/µm	(Nm/mrad)	(rpm)
25 x 10/28 x 16	18,800	31,000	0.24	450	80	3,300
32 x 10/16	26,000	47,000	0.30	650	140	3,000
40 x 5	29,000	64,000	0.50	850	300	2,200
40 x 10/12/16	44,500	111,000	0.60	1,300	450	2,600
50 x 5	41,000	89,000	0.60	900	400	2,000
50 x 20	47,500	127,000	0.75	1,500	620	2,200
80 x 20	113,000	250,000	2.60	1,400	1,500	1,200

1) See page 99 for load on bearing

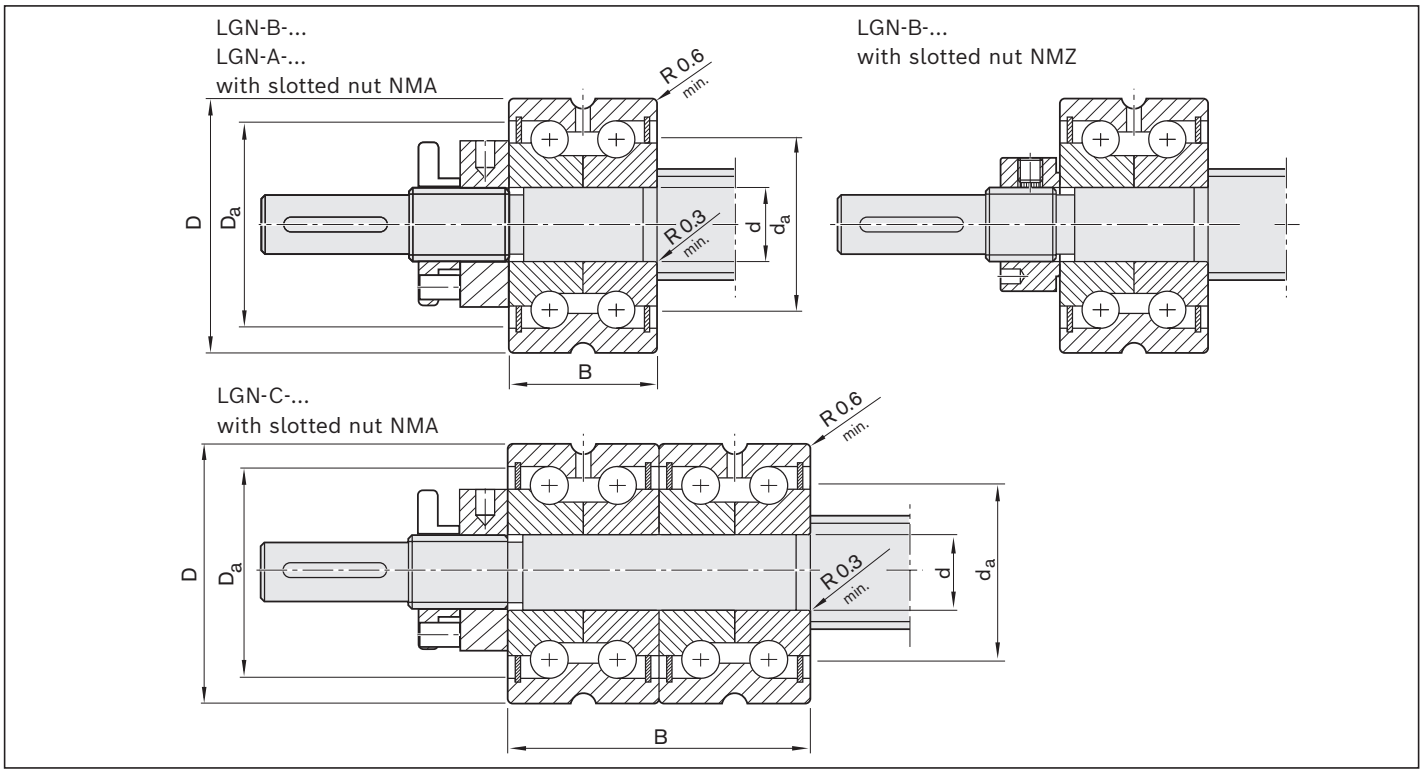

Size	(mm)			Mounting dimensions (mm)			
	d	D	B	D_a		d_a	
d_0 x P				min	max	min	max
25 x 10/28 x 16	$17_{-0.010}$	$47_{-0.010}$	$25_{-0.25}$	34	37	23	33
32 x 10/16	$20_{-0.010}$	$52_{-0.010}$	$28_{-0.25}$	40	43	25	39
40 x 5	$30_{-0.010}$	$62_{-0.010}$	$28_{-0.25}$	50	53	40	49
40 x 10/12/16	$25_{-0.005}$	$57_{-0.010}$	$56_{-0.05}$	45	48	32	44
50 x 5	$35_{-0.010}$	$72_{-0.011}$	$34_{-0.25}$	59	62	45	58
50 x 20	$30_{-0.005}$	$62_{-0.010}$	$56_{-0.50}$	50	53	40	49
80 x 20	$50_{-0.005}$	$110_{-0.010}$	$54_{-0.25}$	88	100	63	87

Suitable for screw ends: Form

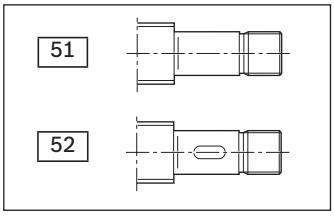

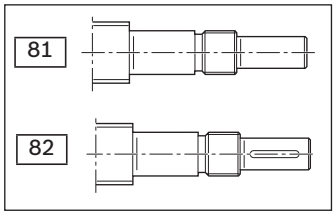

Bearing assembly LAD

Floating bearing with deep-groove ball bearing

The floating bearing system consists of:
- deep-groove ball bearing as per DIN 625... .2RS
- retaining ring DIN 471 (2 pcs)

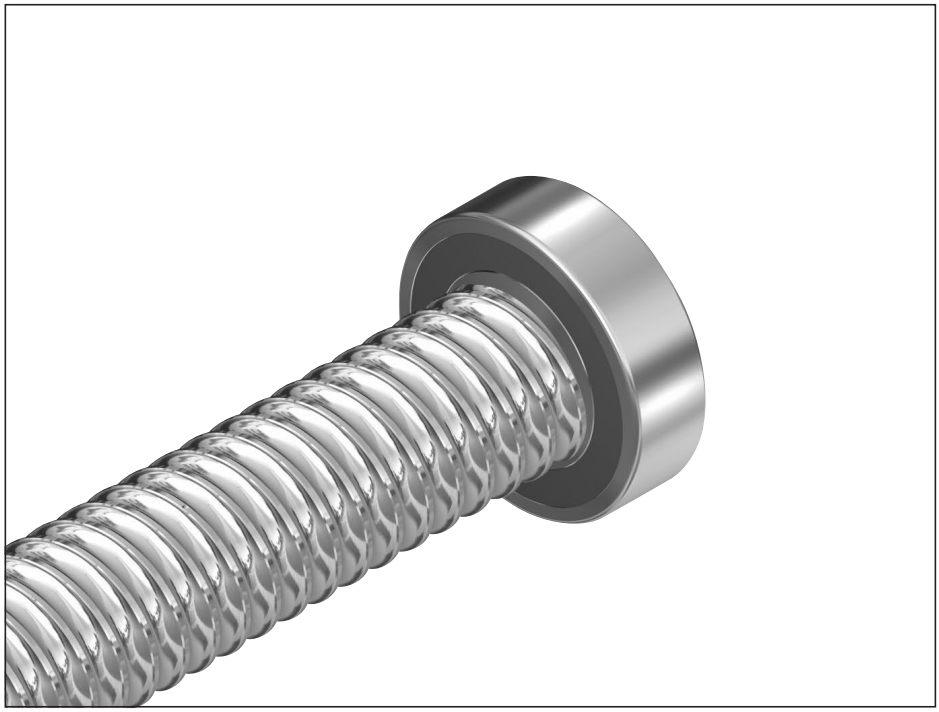

Separate technical dimensioning to determine the limit values is absolutely necessary for all attachments (e.g. pillow block units, bearing assembly, etc.)

Size		Single parts				Load ratings	
		Deep-groove ball bearing DIN 625		Retaining ring DIN 471			
d_0 x P	Part number	Abbreviation	Part number	Abbreviation	Part number	dyn. C (N)	stat. C_0 (N)
25 x 10	R1590 617 00	6203.2RS	R3414 050 00	17x1	R3410 749 00	9,500	4,150
28 x 16	R1590 617 00	6203.2RS	R3414 050 00	17x1	R3410 749 00	9,500	4,150
32 x 10/16	R1590 620 00	6204.2RS	R3414 038 00	20x1.2	R3410 735 00	12,700	5,700
	R1590 625 00	6205.2RS	R3414 063 00	25x1.2	R3410 750 00	14,300	6,950
40 x 10/12/16	R1590 630 00	6206.2RS	R3414 051 00	30x1.5	R3410 724 00	19,300	9,800
50 x 20	R1590 635 00	6207.2RS	R3414 075 00	35x1.5	R3410 725 00	25,500	13,200
80 x 20	R1590 660 00	6212.2RS	R3414 078 00	60x2	R3410 764 00	52,000	31,000

Suitable for screw ends: Form

L1

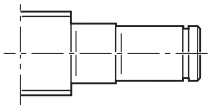

21

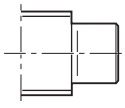

31

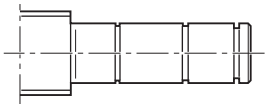

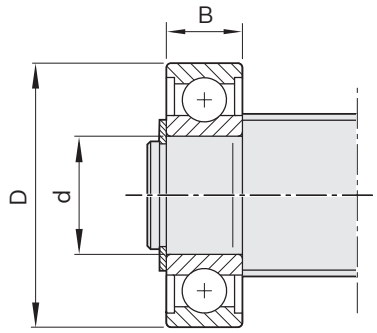

Size	(mm)			Weight complete
d_0 x P	d	D	B	(kg)
25 x 10	17	40	12	0.064
28 x 16	17	40	12	0.064
32 x 10/16	20	47	14	0.106
	25	52	15	0.125
40 x 10/12/16	30	62	16	0.195
50 x 20	35	72	17	0.288
80 x 20	60	110	22	0.783

Bearing assembly LAS

Fixed bearing with angular-contact thrust ball bearing LGS

Double-thrust, series LAS-E

The fixed bearing consists of:
- Angular-contact ball bearing LGS as per DIN 628. Not available as a separate part.
- Slotted nut NMA

Separate technical dimensioning to determine the limit values is absolutely necessary for all attachments (e.g. pillow block units, assembly group bearing unit, etc.).

Size d_0 x P	LAS Part number	LGS Abbreviation	Slotted nut Abbreviation	Slotted nut Part number	Weight complete m (kg)	C (kN)	C_0 (kN)	n_G 1) (min^{-1})
25 x 10	R159A 417 01	LGS-E-1747	NMA 17x1	R3446 014 04	0.29	27.9	31.9	8,550
28 x 16	R159A 417 01	LGS-E-1747	NMA 17x1	R3446 014 04	0.29	27.9	31.9	8,550
32 x 10/16	R159A 420 01	LGS-E-2047	NMA 20x1	R3446 015 04	0.57	39.9	63.8	8,550
40 x 10/12/16	R159A 430 01	LGS-E-3072	NMA 30x1.5	R3446 016 04	1.68	98.3	163.1	5,850
50 x 20	R159A 435 01	LGS-E-3580	NMA 35x1.5	R3446 012 04	2.19	111.2	188.5	4,950
80 x 20	R159A 450 01	LGS-E-50110	NMA 50x1.5	R3446 019 04	4.95	211.2	392.3	3,600
80 x 20	R159A 460 01	LGS-E-60130	NMA 60x2	R9130 342 16	7.49	272.5	534.6	3,015

1) Values as a guide for low bearing load, good heat dissipation and suitable lubricating greases with low consistency
2) Version 1+1

Suitable for screw ends: Form

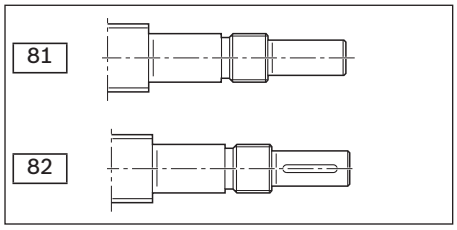

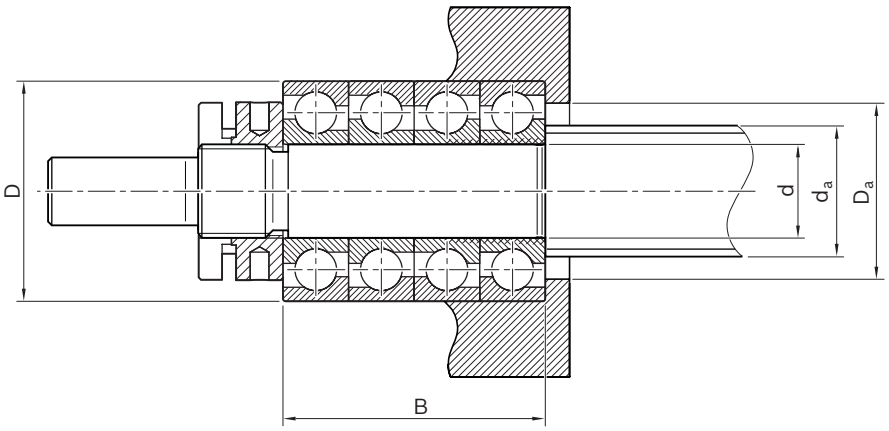

2)

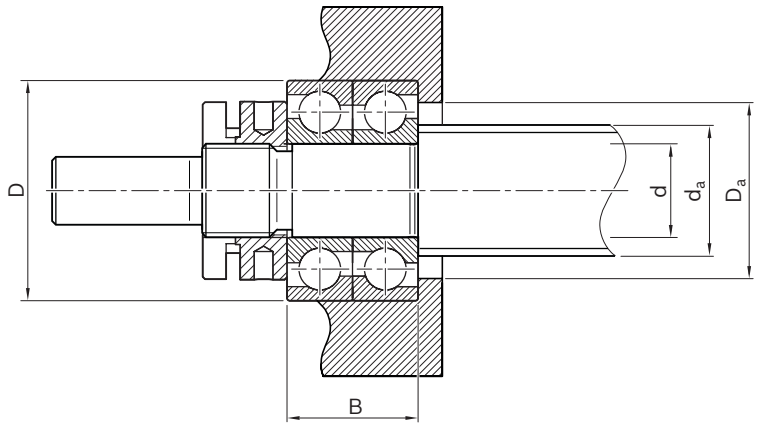

	d_0 x P	(mm) d	D	B	D_a min.	D_a max.	d_a min.	d_a max.
	25 x 10	17 $_{-0.008}$	47 $_{-0.011}$	28	36.2	41.4	22.6	35.0
	28 x 16	17 $_{-0.008}$	47 $_{-0.011}$	28	36.2	41.4	22.6	35.0
	32 x 10/16	20 $_{-0.010}$	47 $_{-0.011}$	56	36.0	41.0	25.6	35.0
	40 x 10/12/16	30 $_{-0.010}$	72 $_{-0.013}$	76	56.5	65.0	37.0	55.5
	50 x 20	35 $_{-0.012}$	80 $_{-0.013}$	84	63.0	71.0	44.0	62.0
	80 x 20	50 $_{-0.012}$	110 $_{-0.015}$	108	89.0	100.0	61.0	88.0
	80 x 20	60 $_{-0.015}$	130 $_{-0.018}$	124	106.0	118.0	72.0	102.0

Slotted Nuts NMA and NMZ for fixed bearings

Slotted nut NMA

- For maximum vibratory loads
- For new designs

M_A = tightening torque for slotted nut
F_{aB} = axial breaking load of slotted nut
M_{AG} = tightening torque for set screw

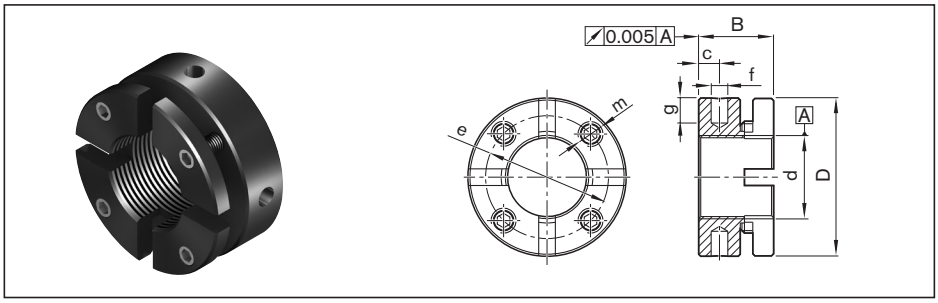

Abbreviation	Part number	(mm)								M_A	F_{aB}	M_{AG}	Mass
		d	D	B	c	m	e	f	g	(Nm)	(kN)	(Nm)	(g)
NMA 15x1	R3446 020 04	M15x1	30	18	5	M5	24	4	5	10	100	3	60
NMA 17x1	R3446 014 04	M17x1	32	18	5	M5	26	4	5	15	120	3	70
NMA 20x1	R3446 015 04	M20x1	38	18	5	M6	31	4	6	18	145	5	130
NMA 25x1.5	R3446 011 04	M25x1.5	45	20	6	M6	38	5	6	25	205	5	160
NMA 30x1.5	R3446 016 04	M30x1.5	52	20	6	M6	45	5	7	32	250	5	200
NMA 35x1.5	R3446 012 04	M35x1.5	58	20	6	M6	51	5	7	40	280	5	230
NMA 40x1.5	R3446 018 04	M40x1.5	65	22	6	M6	58	6	8	55	350	5	300
NMA 45x1.5	R9130 342 15	M45x1.5	70	22	6	M6	63	6	8	65	360	5	340
NMA 50x1.5	R3446 019 04	M50x1.5	75	25	8	M6	68	6	8	85	450	5	430
NMA 60x2	R9130 342 16	M60x2.0	90	26	8	M8	80	6	8	100	550	15	650
NMA 70x2	R9130 342 17	M70x2.0	100	28	9	M8	90	8	10	130	650	15	790
NMA 90x2	R9163 113 51	M90x2.0	130	32	13	M10	118	8	10	200	900	20	1,530

NMA 15 to NMA 40 with 4 segments
NMA 45 to NMA 90 with 6 segments

Slotted nut NMZ

- For existing designs
- For timing belt side drive
- For driven nuts

M_A = tightening torque for slotted nut
F_{aB} = axial breaking load of slotted nut
M_{AG} = tightening torque for set screw

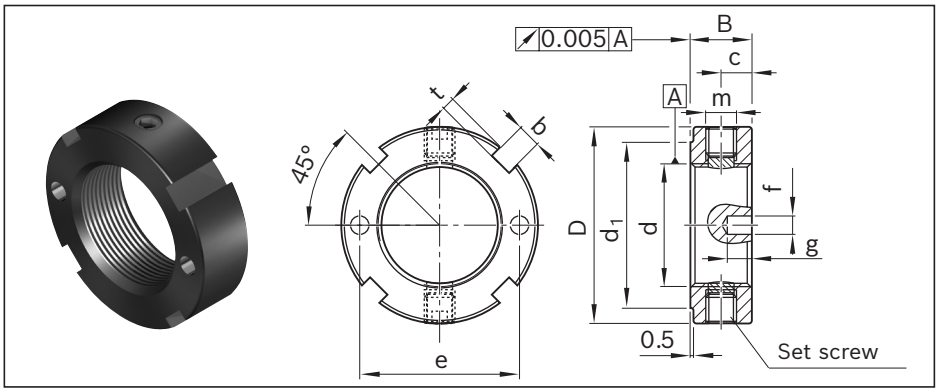

Abbreviation	Part number	(mm)											M_A	F_{aB}	M_{AG}	Mass
		d	D	B	d_1	c	m	b	t	e	f	g	(Nm)	(kN)	(Nm)	(g)
NMZ 6x0.5	R3446 001 04	M6x0.5	16	8	12	4	M4	3	2.0	11.0	2.5	3.5	2	17	1	10
NMZ 10x1	R3446 002 04	M10x1	18	8	14	4	M4	3	2.0	14.0	2.5	3.5	6	31	1	10
NMZ 12x1	R3446 003 04	M12x1	22	8	18	4	M4	3	2.0	17.0	2.5	3.5	8	38	1	15
NMZ 17x1	R3446 004 04	M17x1	28	10	23	5	M5	4	2.0	22.5	3.0	4.0	15	57	3	28
NMA 20x1	R3446 005 04	M20x1	32	10	27	5	M5	4	2.0	26.0	3.0	4.0	18	69	3	35
NMZ 25x1.5	R3446 007 04	M25x1.5	45	20	40	10	M6	5	2.0	35.0	4.0	5.0	25	211	5	55
NMA 30x1.5	R3446 006 04	M30x1.5	45	12	40	6	M6	5	2.0	37.5	4.0	5.0	32	112	5	75
NMZ 45x1.5	R3446 032 04	M45x1.5	65	14	59	7	M6	6	2.5	–	–	–	65	181	5	170
NMZ 55x2	R3446 033 04	M55x2	75	16	68	8	M6	7	3.0	–	–	–	95	229	5	230
NMZ 60x2	R3446 031 04	M60x2	80	16	73	8	M6	7	3.0	–	–	–	100	255	5	250
NMZ 70x2	R3446 034 04	M70x2	92	18	85	9	M8	8	3.5	–	–	–	130	305	15	360
NMZ 80x2	R3446 035 04	M80x2	105	18	95	9	M8	8	3.5	–	–	–	160	355	15	460
NMZ 90x2	R3446 036 04	M90x2	120	20	108	10	M8	10	4.0	–	–	–	200	410	15	700

Technical notes

JIS 1192 defines a ball screw assembly as follows:

A ball screw drive (BASA) is a unit consisting of a ball screw shaft, ball nut, and balls that is able to convert rotary motion into linear motion, and vice versa.

Advantages over the acme screw drive
- The maximum mechanical efficiency of an Acme screw drive is 50%, whereas a planetary screw assembly can achieve 90%, and a ball screw assembly 98%.
- Higher life expectancy due to negligible wear during operation
- Less drive power required
- No stick-slip effect
- More precise positioning
- Higher travel speed
- Less heat-up

Due to the high level of effectivity (low friction level between the screw and the nut), ball screw drives are not self-locking.

⚠ Safety information
If installing in a non-horizontal position, customers should check whether separate protection against falling loads is necessary, e.g. an arrestor nut. With particularly critical applications in vertical operation, we recommend installing arrestor nuts. Please consult us.

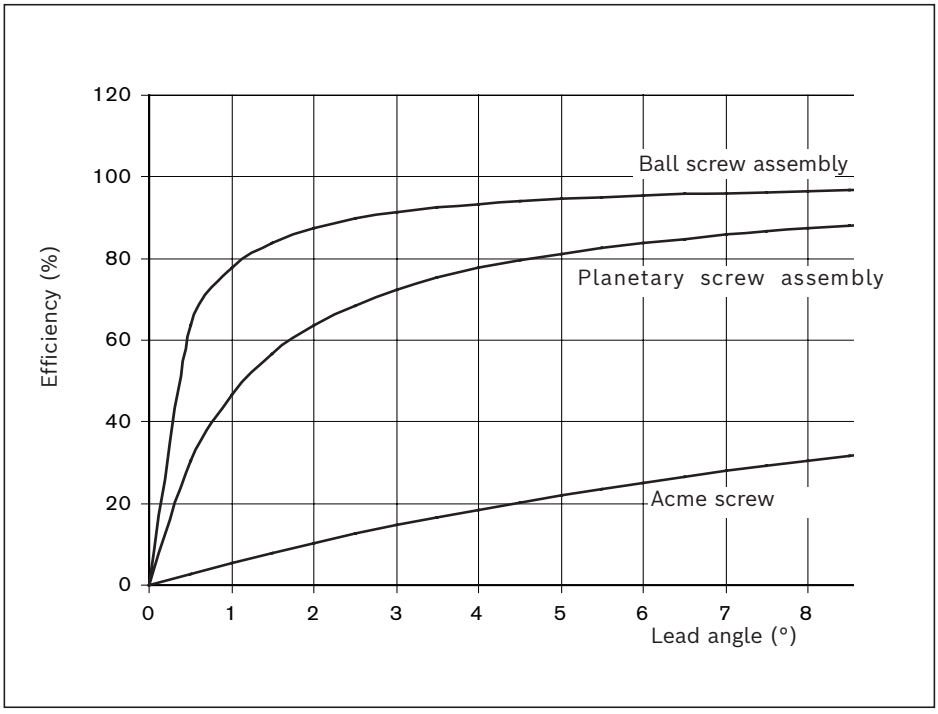

Selection criteria for ball screw drives

The factors below are significant when rating a ball screw drive:
- Degree of accuracy required (lead deviation)
- Load
- Service life
- critical speed
- buckling load
- rigidity/permissible clearance or desired preload
- characteristic speed (max. permissible linear speed)

The following points should be taken into consideration when selecting a PLSA that is to be both cost-efficient and optimally designed:
- The lead is a crucial factor in the load-bearing capacity (conditional on the maximum possible ball diameter) and the drive torque.
- The calculation of the service life should be based on average loads and average speeds, not on maximum values.
- In order for us to provide you with a customized solution, installation drawings or sketches of the nut environment should be enclosed.

⚠ Note

Radial and eccentric forces relative to the screw must be avoided, as they can negatively affect the ball screw drive's performance and shorten its service life.

Where special conditions of use are involved, please consult us.

Load ratings and service life
The calculations for the load capacities and service lives are based on JIS 1192. The dynamic load capacities in the tables are above the JIS 1192 values. These values have been confirmed in tests.

Static load rating C_0
The static load rating is an axial, concentrically acting force that induces a permanent deformation of 0.0001 x the ball diameter between the ball and the ball track.

Dynamic load rating C
The dynamic load rating is an axial, concentrically acting force of constant magnitude and direction under which 90% of a sufficiently large number of identical BASAs can achieve a nominal service life of one million revolutions.

Service life
The nominal service life is expressed by the number of revolutions (or number of operating hours at constant speed) that will be attained or exceeded by 90% of a representative sample of identical BASAs before the first signs of material fatigue become evident. The nominal life is designated as
L or L_h h, depending on whether it is specified in revolutions or hours.

Short stroke
Short stroke applications = stroke ≤ nut length
Lubrication:
During a short stroke, the planets do not make a real turn. It is therefore impossible for an adequate lubricating film to form. This may result in premature wear. To avoid this, it is sufficient to perform longer strokes at regular intervals with simultaneous relubrication as “lubricating strokes”.

Please consult our regional centers regarding short stroke applications. You can find your local contact person at: www.boschrexroth.com/contact

Load rating:
Short stroke applications will increase the number of times a rolling load passes over each point within the load zone.
This reduces the load rating.

Critical speed and buckling load
The critical speed and buckling load can be checked using the corresponding charts.
For precise calculations
see formula 12 15 , in the section “Calculations”

Characteristic speed $d_0 \cdot n$
Due to their structural design, Rexroth ball screw assemblies can be operated at very high speeds. Characteristic speeds are depending on the nut type.

Internal recirculation	≤70000
External recirculation	≤80000
End deflector	≤180000

d_0 = nominal diameter (mm)
n = speed (rpm)
The theoretically possible maximum linear speed v_{max} (m/min) is specified on the page featuring the relevant nut. Actually attainable speeds are heavily dependent among other factors on preload and duty cycle. They are generally restricted by the critical speed. (See “Calculations”).

Material, hardness
BASAs are made of high-quality, heat-treatable steel, carbon chrome alloy steels or case-hardened steels. The screw and nut raceways have a minimum Rockwell hardness of HRC 58.
Normally, the screw ends are not hardened.

Sealing
Ball screw drives need protection from contamination. Therefore, installing a dust sealing on the screw that can effectively prevent particles from the outside entering internal space.

Permissible operating temperatures

Permissible operating temperatures:
$-20\ °C \leq T_{operation} \leq 110\ °C$

When the operating environment temperature exceeds 110°C, it is necessary to add a safety device to the ball screw system. Under high-temperature conditions, the hardness of the ball screw decreases, leading to a reduction in the load-bearing capacity and service life of the ball screw

Bearing
When calculating the life expectancy of the overall system, the end bearings must be considered separately.

Acceptance Conditions and Tolerance Grades

Permissible travel deviation

According to JIS 1192-1997

Symbol definitions: (excerpt)

l_0 = nominal travel
l_1 = thread length
Δl_0 = travel deviation
l_u = useful travel
l_e = excess travel (non useable length)
C = travel compensation for useable length
e_p = tolerance mean target travel deviation
v_{up} = permissible travel variation with useful travel l_u
v_{300p} = permissible travel deviation within 300 mm travel
$v_{2\Pi p}$ = permissible travel deviation within one revolution ($2_{\Pi rad}$)
= Travel compensation (target travel deviation)
= Actual travel deviation
= Mean acutal travel deviation
= Permissible travel variation (tolerance "envelope")

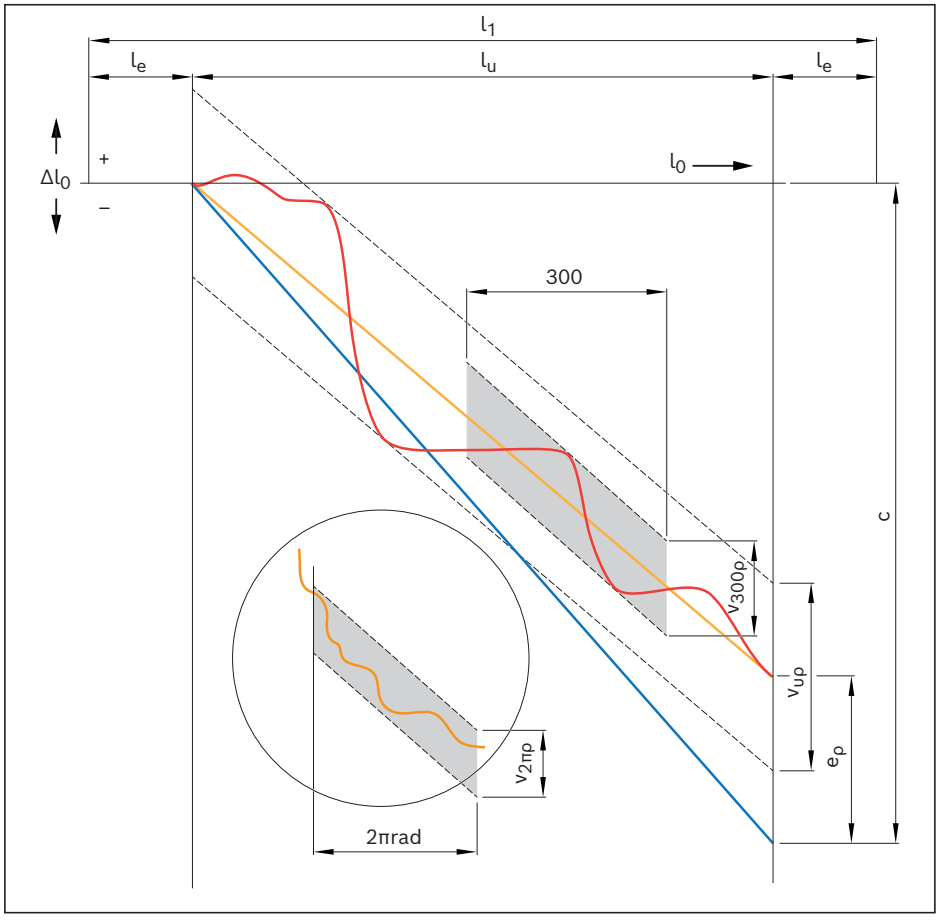

Tolerance grades of precision screws

Tolerance grade	3	5

Permissible travel deviation v_{300p} within 300 mm travel

v_{300p} Accuracy class (µm)	C3	C5
JIS	8	18

Permissible travel deviation $v_{2\Pi p}$ within 2Πrad

$v_{2\Pi}$ Accuracy class (µm)	C3	C5
JIS	6	8

Tolerance for mean actual travel deviation (e_p)

Unit µm

Accuracy class		C3	C5
Over	Less	e_p	e_p
0	315	12	23
315	400	13	25
400	500	15	27
500	630	16	30
630	800	18	35
800	1000	21	40
1000	1250	24	46
1250	1600	29	54
1600	2000	35	65
2000	2500	41	77
2500	3150	50	93
3150	4000	62	115
4000	5000	76	140
5000	6300	-	170
6300	8000	-	213

Tolerance for permissible travel variation within useful travel (v_{up})

Unit µm

Accuracy class		C3	C5
Over	Less	v_{up}	v_{up}
0	315	8	18
315	400	10	20
400	500	10	20
500	630	12	23
630	800	13	25
800	1000	15	27
1000	1250	16	30
1250	1600	18	35
1600	2000	21	40
2000	2500	24	46
2500	3150	29	54
3150	4000	35	65
4000	5000	41	77
5000	6300	-	93
6300	8000	-	115

Ball screw assemblies runout and perpendicular tolerance

Acoording to (JIS B1192-3 2018)

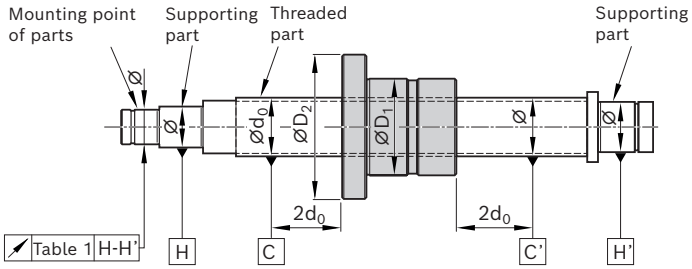

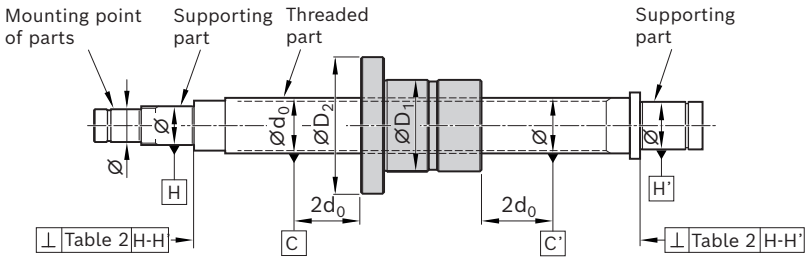

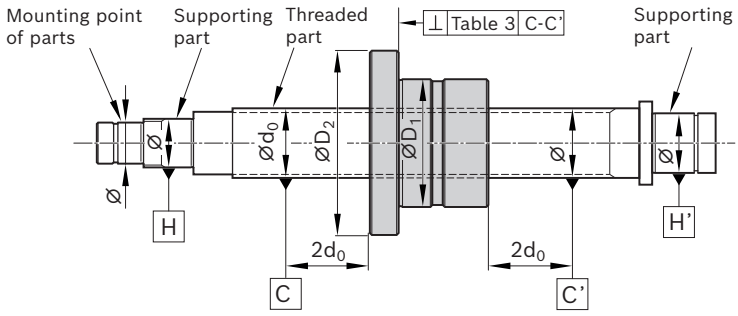

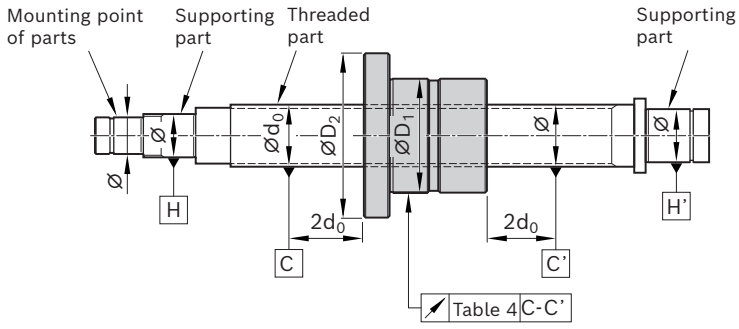

Table 1

Nominal diameter d_0 (mm)		Runout tolerance(max.) (µm)	
above	up to and incl.	C3	C5
-	8	8	10
8	12	8	11
12	20	9	12
20	32	10	13
32	50	12	15
50	80	13	17
80	125	15	20

Table 2

Nominal diameter d_0 (mm)		Perpendicular tolerance(max.) (µm)	
above	up to and incl.	C3	C5
-	8	4	5
8	12	4	5
12	20	4	5
20	32	4	5
32	50	4	5
50	80	5	7
80	125	6	8

Table 3

Outside diameter of nut D_1(mm)		Perpendicular tolerance(max.) (µm)	
above	up to and incl.	C3	C5
-	20	8	10
20	32	8	10
32	50	8	11
50	80	10	13
80	125	12	15
125	160	13	17
160	200	14	18
200	250	15	20

Table 4

Outside diameter of nut D_1(mm)		Runout tolerance(max.) (µm)	
above	up to and incl.	C3	C5
-	20	9	12
20	32	10	12
32	50	12	15
50	80	15	19
80	125	20	27
125	160	22	30
160	200	25	34
200	250	28	38

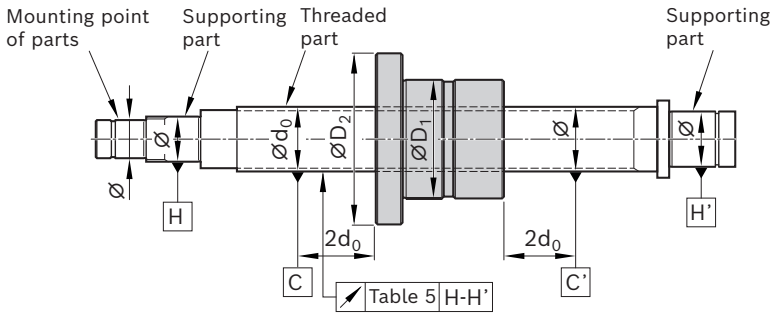

Table 5

Nominal diameter d_0 (mm)		Runout tolerance(max.) (µm)	
above	up to and incl.	C3	C5
-	8	8	10
8	12	8	11
12	20	9	12
20	32	10	13
32	50	12	15
50	80	13	17
80	125	15	20

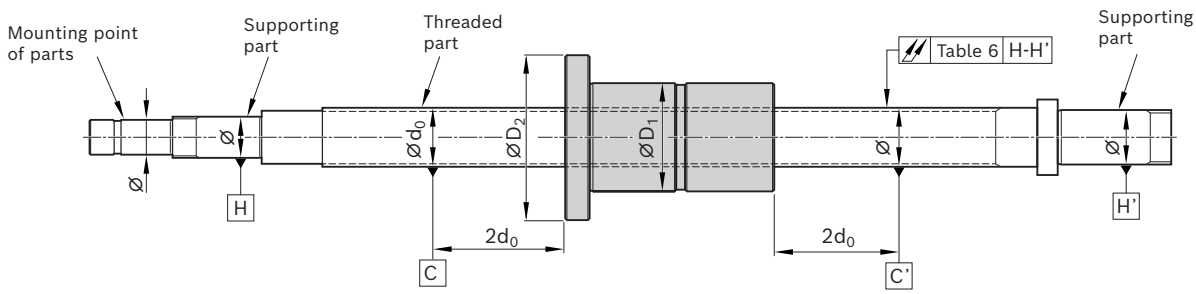

Table 6

Grade			**C3**							**C5**						
Nominal diameter d_0 (mm)		**above**	-	8	12	20	32	50	80	-	8	12	20	32	50	80
		up to and incl.	8	12	20	32	50	80	125	8	12	20	32	50	80	125
Screw shaft total length (mm)	**above**	**up to and incl.**														
	-	125	25	25	20					35	35	35				
	125	200	35	35	25	20				50	40	40	35			
	200	315	50	40	30	30				65	55	45	40			
	315	400	60	50	40	35	25			75	65	55	45	35		
	400	500		65	50	40	30				80	60	50	45		
	500	630		70	55	45	35	30			90	75	60	50	40	
	630	800			70	55	40	35				90	70	55	45	
	800	1 000			95	65	50	40	30			120	85	65	50	45
	1 000	1 250			120	85	60	45	35			150	100	75	60	50
	1 250	1 600			160	110	75	55	40			190	130	95	70	55
	1 600	2 000				140	95	70	50				170	120	85	65
	2 000	2 500					120	85	60					150	110	80
	2 500	3 150					160	110	75					200	140	95
	3 150	4 000					220	150	100					260	180	120
	4 000	5 000						200	130						240	160
	5 000	6 300													310	210
	6 300	8 000														280
	8 000	10 000														370

Preload and rigidity

Nut system preload

Rexroth supplies preloaded nut systems.

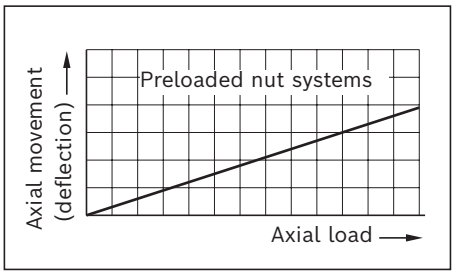

The screw is typically far less rigid than the nut unit (for details see “Overall axial rigidity...”).

General information:
The preload of the nut acts as additional load. For this reason, reduce the preload to the required minimum.

Preloaded single nut
Single nuts can be preloaded in an optimum way with preload classes C1, C2 or C3 by means of ball size selection.

Double nut
Bracing two single nuts eliminates the axial play due to production-related issues and increases rigidity, which improves positioning accuracy.
To prevent the service life from being shortened, the preload should not amount to $^1/_3$ of the average operating load. Depending on the application, we preload the nut system with preload classes C4 or C5.

Rigidity

The rigidity of a ball screw assembly is also affected by all adjoining parts such as bearings, housing bores, nut housings, etc.

Overall axial rigidity R_{bs} of the ball screw assembly

The overall axial rigidity R_{bs} is made up of the component rigidity of the bearing R_{fb}, the screw R_S and the nut unit R_{nu}.

$$\frac{1}{R_{bs}} = \frac{1}{R_{fb}} + \frac{1}{R_S} + \frac{1}{R_{nu}} \quad (16)$$

Note:

Please note that in most cases the rigidity R_S of the screw will be significantly lower than the rigidity R_{nu} of the nut unit. With size 40 x 10, for example, the rigidity R_{nu} of the nut unit is two to three times greater than the rigidity R_S of a 500 mm-long screw.

Rigidity of the bearing R_{fb}

The rigidity of the bearings corresponds to the values in the bearing manufacturer's catalog.
See the dimension tables in this catalog for the rigidity values of the bearings that Rexroth can provide.

Rigidity in the area of the nut unit R_{nu}

See the corresponding tables for rigidity values.

Rigidity of the screw R_S

The rigidity of the screw R_S depends on the type of bearing used.
See the corresponding tables for rigidity values.

1 Fixed bearing of the ball screw shaft on one end.

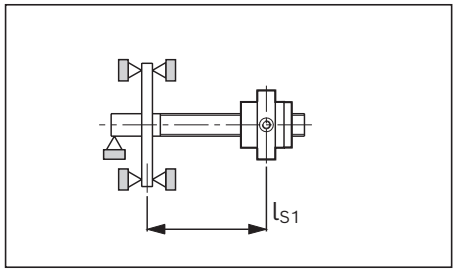

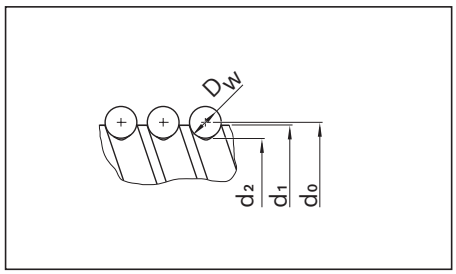

$$R_{S1} = 165 \cdot \frac{(d_0 - 0.71 \cdot D_w)^2}{l_{S1}} \quad (N/\mu m) \quad (17)$$

R_{S1}	=	rigidity of the screw	(N/µm)
d_0	=	nominal diameter	(mm)
D_w	=	ball diameter	(mm)
l_{S1}	=	Bearing - nut distance	(mm)

2 Fixed bearing of the ball screw shaft on both ends.

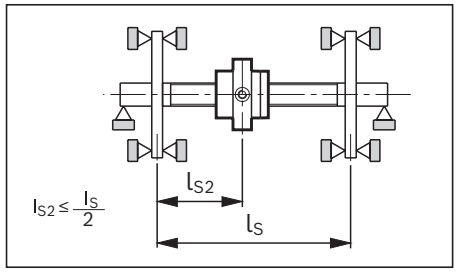

$$R_{S2} = 165 \cdot \frac{(d_0 - 0.71 \cdot D_w)^2}{l_{S2}} \cdot \frac{l_S}{l_S - l_{S2}} \quad (N/\mu m) \quad (18)$$

The lowest screw rigidity occurs at the center of the screw R_{S2min} ($l_{S2} = l_S/2$) and thus equals:

$$R_{S2min} = 660 \cdot \frac{(d_0 - 0.71 \cdot D_w)^2}{l_S} \quad (N. \quad (19)$$

R_{S2}	=	rigidity of the screw	(N/µm)
d_0	=	nominal diameter	(mm)
D_w	=	ball diameter	(mm)
l_S	=	distance between bearing and bearing	(mm)
l_{S2}	=	distance between bearing and nut	(mm)

Preload and rigidity of single nuts

Dynamic drag torque, preload, and rigidity for screws of tolerance grades 3 and 5 with single nuts FEI-E-D, FEE-E-D, FEA-E-D, ZEI-E-D

T_0 = overall dynamic drag torque
T_0 = $T_{p0} + T_{RD}$
C = dynamic axial load capacity
C_0 = static load rating
F_{PR} = pre-tensioning force
T_{RD} = dynamic drag torque of the 2 seals
R_S = rigidity of the screw
R_{nu} = rigidity of the nut
T_{p0} = dynamic drag torque without seals
d_0 = nominal diameter
P = lead
D_w = ball diameter
i = Number of load-bearing gears

The values given for dynamic drag torque are proven practical indicators for the nut preloading.

Size	Load ratings		Rigidity of the screw
	dyn. C (N)	stat. C_0 (N)	R_S $\left(\frac{N \cdot m}{\mu m}\right)$
d_0 x P x D_w - i			
25 x 10R x 3.5-3	15150	25000	91
25 x 10R x 3.5-4	19410	33330	91
25 x 10R x 3.5-5	23510	41660	91
25 x 10R x 3.969-4	24920	42570	89
25 x 10R x 4.762-1.5×2	24940	38620	86
25 x 10R x 4.762-2.5×1	21320	32180	86
25 x 10R x 4.762-3.5×1	28480	45060	86
25 x 10R x 4.762-4	31940	51500	86
28 x 16R x 4.762-5	40580	71940	110
32 x 10R x 6.35-1.5×2	40580	64630	140
32 x 10R x 6.35-2.5×1	34690	53860	140
32 x 10R x 6.35-2.5×2	62960	107720	140
32 x 10R x 6.35-3	35330	52510	140
32 x 10R x 6.35-3.5×1	46330	75410	140
32 x 10R x 6.35-4	45250	70020	140
32 x 10R x 6.35-5	62960	107720	140
32 x 16R x 6.35-4	51500	85590	140
40 x 10R x 6.35-1.5×2	45610	82100	228
40 x 10R x 6.35-2.5×1	38990	68420	228
40 x 10R x 6.35-2.5×2	70780	136840	228
40 x 10R x 6.35-3.5×1	52080	95790	228
40 x 10R x 6.35-4	58420	109470	228
40 x 10R x 6.35-5	70780	136840	228
40 x 10R x 7-3	45610	74390	224
40 x 10R x 7-4	58410	99180	224
40 x 10R x 7-5	70770	123980	224
40 x 12R x 6.35-2.5×1	38930	68330	228
40 x 12R x 6.35-2.5×2	70660	136670	228
40 x 12R x 6.35-3.5×1	51990	95670	228
40 x 12R x 6.35-4	58320	109330	228
40 x 12R x 7-3	45530	74290	224
40 x 12R x 7-4	58310	99060	224
40 x 12R x 7-5	70650	123830	224
40 x 16R x 6.35-4	58080	108980	228
50 x 20R x 7.938-3	60810	108570	356
80 x 20R x 10-3	108140	237050	941
80 x 20R x 10-4	138500	316070	941
80 x 20R x 12.7-3	142540	279170	910
80 x 20R x 12.7-4	182550	372220	910

Size	Rigidity and dynamic drag torque of the single nuts with preload class C1			Preload class C2			Preload class C3		
	R_{nu} (N/µm)	F_{pr} (N)	T_{p0} (Nm) Tolerance grade 3; 5	R_{nu} (N/µm)	F_{pr} (N)	T_{p0} (Nm) Tolerance grade 3; 5	R_{nu} (N/µm)	F_{pr} (N)	T_{p0} (Nm) Tolerance grade 3; 5
d_0 x P x D_w - i									
25 x 10R x 3.5-3	163	303	0.043	187	454	0.064	222	757	0.107
25 x 10R x 3.5-4	215	388	0.055	246	582	0.082	292	970	0.137
25 x 10R x 3.5-5	266	470	0.066	305	705	0.099	362	1175	0.165
25 x 10R x 3.969-4	301	498	0.07	345	747	0.106	409	1246	0.176
25 x 10R x 4.762-1.5×2	193	498	0.071	221	748	0.107	262	1247	0.178
25 x 10R x 4.762-2.5×1	163	426	0.061	186	639	0.091	221	1066	0.152
25 x 10R x 4.762-3.5×1	224	569	0.081	256	854	0.122	304	1424	0.203
25 x 10R x 4.762-4	312	638	0.091	357	958	0.137	423	1597	0.228
28 x 16R x 4.762-5	424	811	0.13	485	1217	0.195	575	2029	0.325
32 x 10R x 6.35-1.5×2	239	811	0.148	273	1217	0.223	324	2029	0.371
32 x 10R x 6.35-2.5×1	200	693	0.127	229	1040	0.19	272	1734	0.317
32 x 10R x 6.35-2.5×2	390	1259	0.23	446	1888	0.345	529	3148	0.576
32 x 10R x 6.35-3	196	706	0.129	225	1060	0.194	266	1766	0.323
32 x 10R x 6.35-3.5×1	277	926	0.169	317	1389	0.254	376	2316	0.423
32 x 10R x 6.35-4	258	905	0.165	296	1357	0.248	350	2262	0.414
32 x 10R x 6.35-5	475	1259	0.23	543	1888	0.345	644	3148	0.576
32 x 16R x 6.35-4	388	1030	0.189	445	1545	0.284	527	2575	0.473
40 x 10R x 6.35-1.5×2	284	912	0.207	325	1368	0.311	386	2280	0.518
40 x 10R x 6.35-2.5×1	239	779	0.177	273	1169	0.265	324	1949	0.442
40 x 10R x 6.35-2.5×2	464	1415	0.321	531	2123	0.482	630	3539	0.803
40 x 10R x 6.35-3.5×1	329	1041	0.236	377	1562	0.355	447	2604	0.591
40 x 10R x 6.35-4	453	1168	0.265	518	1752	0.398	614	2921	0.663
40 x 10R x 6.35-5	561	1415	0.321	642	2123	0.482	761	3539	0.803
40 x 10R x 7-3	238	912	0.208	272	1368	0.312	322	2280	0.52
40 x 10R x 7-4	313	1168	0.266	358	1752	0.399	425	2920	0.666
40 x 10R x 7-5	387	1415	0.323	443	2123	0.484	526	3538	0.806
40 x 12R x 6.35-2.5×1	242	778	0.176	277	1168	0.264	328	1946	0.441
40 x 12R x 6.35-2.5×2	469	1413	0.32	537	2120	0.48	637	3533	0.8
40 x 12R x 6.35-3.5×1	334	1039	0.235	382	1559	0.353	453	2599	0.588
40 x 12R x 6.35-4	459	1166	0.264	525	1749	0.396	622	2916	0.66
40 x 12R x 7-3	240	910	0.207	275	1366	0.31	326	2276	0.517
40 x 12R x 7-4	317	1166	0.265	362	1749	0.398	430	2915	0.663
40 x 12R x 7-5	392	1413	0.321	449	2119	0.482	532	3532	0.803
40 x 16R x 6.35-4	465	1161	0.263	532	1742	0.394	631	2904	0.657
50 x 20R x 7.938-3	305	1216	0.344	349	1824	0.516	414	3040	0.86
80 x 20R x 10-3	468	2162	0.973	536	3244	1.46	635	5407	2.434
80 x 20R x 10-4	617	2770	1.247	706	4155	1.87	838	6925	3.117
80 x 20R x 12.7-3	462	2850	1.294	529	4276	1.941	627	7127	3.236
80 x 20R x 12.7-4	609	3651	1.658	697	5476	2.486	826	9127	4.144

Preload and rigidity of double nuts

Dynamic drag torque, preload, and rigidity for screws of tolerance grades 3 and 5 with double nuts
FDI-E-D, FDE-E-D, FDA-E-D, ZDI-E-D

T_0 = overall dynamic drag torque
T_0 = $T_{p0} + T_{RD}$
C = dynamic axial load capacity
C_0 = static load rating
T_{RD} = dynamic drag torque of the 2 seals
R_S = rigidity of the screw
R_{nu} = rigidity of the nut
T_{p0} = dynamic drag torque without seals
d_0 = nominal diameter
P = lead
D_w = ball diameter
i = number of ball track turns

The values given for dynamic drag torque are proven practical indicators for the nut preloading.

Size	Load ratings		Rigidity of the screw
d_0 x P x D_w - i	dyn. C (N)	stat. C_0 (N)	R_S $\left(\frac{N \cdot m}{\mu m}\right)$
25 x 10R x 3.5-3	15150	25000	91
25 x 10R x 3.5-4	19410	33330	91
25 x 10R x 3.969-4	24920	42570	89
25 x 10R x 4.762-1.5×2	24940	38620	86
25 x 10R x 4.762-2.5×1	21320	32180	86
25 x 10R x 4.762-3.5×1	28480	45060	86
25 x 10R x 4.762-4	31940	51500	86
28 x 16R x 4.762-5	40580	71940	110
32 x 10R x 6.35-1.5×2	40580	64630	140
32 x 10R x 6.35-2.5×1	34690	53860	140
32 x 10R x 6.35-2.5×2	62960	107720	140
32 x 10R x 6.35-3	35330	52510	140
32 x 10R x 6.35-3.5×1	46330	75410	140
32 x 10R x 6.35-4	45250	70020	140
32 x 16R x 6.35-4	51500	85590	140
40 x 10R x 6.35-1.5×2	45610	82100	228
40 x 10R x 6.35-2.5×1	38990	68420	228
40 x 10R x 6.35-2.5×2	70780	136840	228
40 x 10R x 6.35-3.5×1	52080	95790	228
40 x 10R x 6.35-4	58420	109470	228
40 x 10R x 7-3	45610	74390	224
40 x 10R x 7-4	58410	99180	224
40 x 12R x 6.35-2.5×1	38930	68330	228
40 x 12R x 6.35-2.5×2	70660	136670	228
40 x 12R x 6.35-3.5×1	51990	95670	228
40 x 12R x 6.35-4	58320	109330	228
40 x 12R x 7.144-3	47380	77280	223
40 x 12R x 7.144-4	60680	103040	223
40 x 16R x 6.35-4	58080	108980	228
80 x 20R x 12.7-3	142540	279170	910
80 x 20R x 12.7-4	182550	372220	910
80 x 20R x 12.7-6	258720	558340	910

Size	20697Rigidity and dynamic drag torque of the double nuts					
	with preload class C5			with preload class C4		
			Tolerance grade 3; 5			Tolerance grade 3; 5
d_0 x P x D_w - i	R_{nu} (N/µm)	F_{pr} (N)	T_{p0} (Nm)	R_{nu} (N/µm)	F_{pr} (N)	T_{p0} (Nm)
25 x 10R x 3.5-3	397	1212	0.171	427	1515	0.213
25 x 10R x 3.5-4	522	1552	0.218	562	1941	0.273
25 x 10R x 3.969-4	556	1994	0.282	599	2492	0.352
25 x 10R x 4.762-1.5×2	469	1995	0.284	506	2494	0.356
25 x 10R x 4.762-2.5×1	394	1706	0.243	425	2132	0.304
25 x 10R x 4.762-3.5×1	544	2278	0.325	586	2848	0.406
25 x 10R x 4.762-4	576	2555	0.364	621	3194	0.455
28 x 16R x 4.762-5	779	3246	0.52	839	4058	0.651
32 x 10R x 6.35-1.5×2	582	3246	0.593	627	4058	0.742
32 x 10R x 6.35-2.5×1	489	2775	0.507	527	3469	0.634
32 x 10R x 6.35-2.5×2	948	5037	0.921	1022	6296	1.151
32 x 10R x 6.35-3	480	2826	0.517	517	3533	0.646
32 x 10R x 6.35-3.5×1	674	3706	0.678	726	4633	0.847
32 x 10R x 6.35-4	632	3620	0.662	681	4525	0.827
32 x 16R x 6.35-4	715	4120	0.756	770	5150	0.945
40 x 10R x 6.35-1.5×2	697	3649	0.828	750	4561	1.035
40 x 10R x 6.35-2.5×1	585	3119	0.708	630	3899	0.885
40 x 10R x 6.35-2.5×2	1136	5662	1.285	1223	7078	1.607
40 x 10R x 6.35-3.5×1	807	4166	0.946	870	5208	1.182
40 x 10R x 6.35-4	848	4673	1.061	914	5842	1.326
40 x 10R x 7-3	586	3648	0.832	631	4561	1.04
40 x 10R x 7-4	772	4673	1.065	831	5841	1.331
40 x 12R x 6.35-2.5×1	590	3114	0.705	635	3893	0.881
40 x 12R x 6.35-2.5×2	1143	5653	1.28	1231	7066	1.599
40 x 12R x 6.35-3.5×1	813	4159	0.941	876	5199	1.177
40 x 12R x 6.35-4	855	4666	1.056	921	5832	1.32
40 x 12R x 7.144-3	602	3790	0.862	648	4738	1.078
40 x 12R x 7.144-4	792	4854	1.104	853	6068	1.38
40 x 16R x 6.35-4	861	4646	1.051	927	5808	1.314
80 x 20R x 12.7-3	1138	11403	5.177	1226	14254	6.472
80 x 20R x 12.7-4	1499	14604	6.631	1615	18255	8.288
80 x 20R x 12.7-6	2209	20697	9.397	2380	25872	11.747

Installation tolerances

Any alignment errors can lead to premature failure of the ball screw assembly, which means that they are not allowed!

To ensure that a BASA can actually achieve the calculated service life and performance, its system-related requirements and limitations must be taken into account at the design stage. Screw assemblies are not suitable for transferring radial forces and torques, such as may be caused by misalignments during installation. The following sections illustrate the most important principles for achieving designs that will be compatible with the screw drive system and its requirements.

When using BASAs, the specified installation tolerances must be observed when designing and building the adjoining structures. The first basic principle is: The higher the BASA's precision and preload, the more accurate the adjoining structures must be.
This applies in particular to applications in which the nut travels close up to the end bearings since, in this area, the risk of distortive stresses and therefore of additional loads is very high.

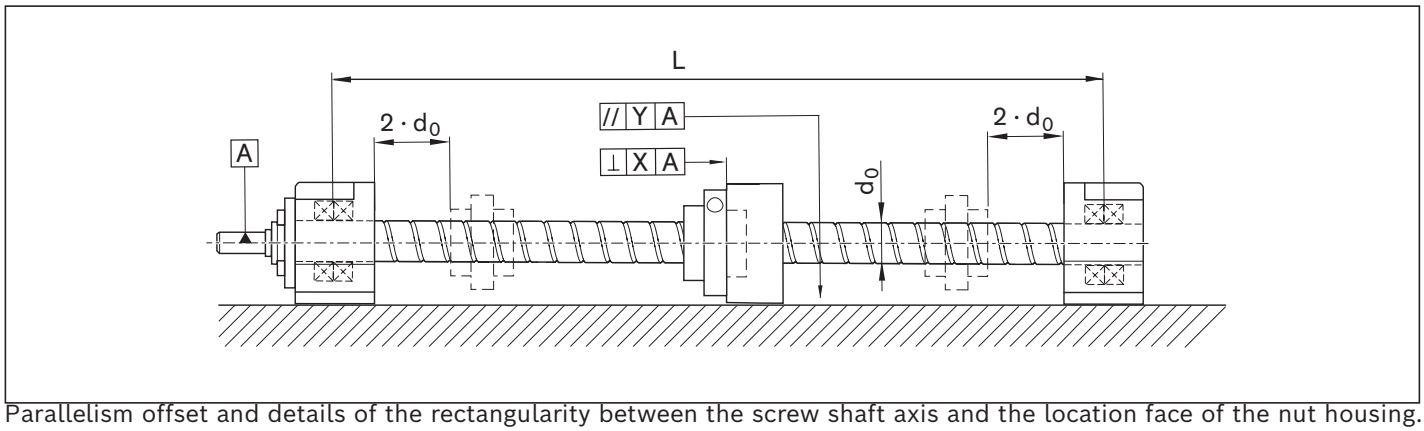

Parallelism offset and details of the rectangularity between the screw shaft axis and the location face of the nut housing.

L = distance between end bearings (mm)
d_0 = nominal diameter of screw (mm)
X = permissible deviation from rectangularity:
The tolerance applies to a surface that must lie between two planes spaced at a distance X from each other which are perpendicular to the reference axis A. (mm)
Y = Permissible parallelism offset between the guide and the ball screw assembly (mm)

The adjacent table shows the most important recommended tolerances for ball screw assemblies as a function of the preload.
These tolerances include the rectangularity of the nut housing (or adjoining structure) relative to the screw axis. The tolerances for parallelism between the guide and the ball screw assembly must also be complied with.
Minimum distance of the nut from the end bearings > 2 • d_0
Any alignment errors can lead to premature breakdown of the ball screw assembly!

Preload option	X (mm)	Y (mm)
Preloaded	0.02	0.02

Lubrication

General lubrication instructions

The lubrication method for ball screws assembly is the same as that for rolling bearings. The following lubrication guidelines, which are applicable to general rolling bearings, can be used for ball screw drive systems:
You can use either oil lubrication or grease lubrication. Selecting the appropriate type of lubricant ensures that the ball screw assembly receives adequate lubrication, allowing it to maintain good performance (load-bearing capacity, corrosion resistance, etc.) and preventing failures caused by overheating or wear. Lubrication reduces friction and extends the service life of ball screw assembly. The choice of lubricant type mainly depends on the following operating conditions: the speed of the ball screw, the working environment temperature, and the load.

1.Oil Lubrication
When using oil lubrication for ball screw assembly, lubricating oil is similar to that used for rolling bearings can be applied. Continuous oil supply provides lubrication, and also cleans and cools the ball screw ball screw assembly, resulting in significant lubrication effectiveness. In principle, most mineral oils commonly used for rolling bearings are suitable. The selection of oil viscosity depends on the working conditions and the diameter of the ball screw assembly. Oil supply rate: Typically 3-5 cm^3/h per threaded turn. However, it may vary based on specific operating conditions and on-site circumstances.

2.Grease Lubrication
When using grease lubrication for ball screws, it typically involves a more complex grease lubrication supply system. Under general working conditions, sufficient lubrication is achieved with lubrication intervals of approximately every 500-1000 hours, meaning that frequent replenishment is generally not necessary. When replenishing grease, it is important to thoroughly clean off old grease from the ball screw before applying new grease. The replenishment interval should be determined based on the specific working conditions.
Never mix different brands or types of grease. The amount of grease added should be approximately half of the space within the ball nut raceway. For ball screw drive mechanisms with typical requirements, rolling bearing grease can be used.
Based on long-term practical experience, we recommend using grease with the following characteristics for better lubrication performance: extreme pressure (EP) properties, resistance to viscosity breakdown, waterproofing, steam resistance, alkali resistance, acid resistance, and other properties.
Grease containing solid lubricating materials (e.g., graphite or MoS2) should not be used.

Calculation

On request, we can perform all calculations to your specifications.

See “Design Calculation Service Form” on page 101

Average speed and average load

Where the operating conditions vary (fluctuating speed and load), the service life must be calculated using the average values F_m and n_m.

– Where the speed fluctuates, the average speed n_m is calculated as follows:

$$n_m = \frac{|n_1| \cdot q_{t1} + |n_2| \cdot q_{t2} + \ldots + |n_n| \cdot q_{tn}}{100\%} \quad (1)$$

$n_1, n_2, \ldots n_n$	= speeds in phases 1 … n	(rpm)
n_m	= average speed	(rpm)
$q_{t1}, q_{t2}, \ldots q_{tn}$	= discrete time step in phases 1 … n	(%)

The following applies to the effective equivalent bearing load:

$$|F_n| > 2.8 \cdot F_{pr} \qquad F_{eff\,n} = |F_n|$$

$$|F_n| \leq 2.8 \cdot F_{pr} \qquad F_{eff\,n} = \left(\frac{|F_n|}{2.8 \cdot F_{pr}} + 1\right)^{\frac{3}{2}} \cdot F_{pr}$$

C	=	dynamic load rating	(N)
$F_{eff\,n}$	=	effective equivalent axial load during phase n	(N)
F_n	=	axial load during phase n	(N)
F_{pr}	=	pre-tensioning force	(N)

– Where the load fluctuates and the speed is constant, the equivalent dynamic axial load F_m is calculated as follows:

$$F_m = \sqrt[3]{|F_{eff\,1}|^3 \cdot \frac{q_{t1}}{100\%} + |F_{eff\,2}|^3 \cdot \frac{q_{t2}}{100\%} + \ldots + |F_{eff\,n}|^3 \cdot \frac{q_{tn}}{100\%}} \quad (2)$$

$F_{eff\,1}, F_{eff\,2}, \ldots F_{eff\,n}$	=	effective equivalent axial load during phases 1 … n	(N)
F_m	=	equivalent dynamic axial load	(N)
$q_{t1}, q_{t2}, \ldots q_{tn}$	=	discrete time step for $F_{eff\,1}, \ldots F_{eff\,n}$	(%)

– Where both the load and the speed fluctuate, the equivalent dynamic axial load F_m is calculated as follows:

$$F_m = \sqrt[3]{|F_{eff\,1}|^3 \cdot \frac{|n_1|}{n_m} \cdot \frac{q_{t1}}{100\%} + |F_{eff\,2}|^3 \cdot \frac{|n_2|}{n_m} \cdot \frac{q_{t2}}{100\%} + \ldots + |F_{eff\,n}|^3 \cdot \frac{|n_n|}{n_m} \cdot \frac{q_{tn}}{100\%}} \quad (3)$$

$F_{eff\,1}, F_{eff\,2}, \ldots F_{eff\,n}$	=	effective equivalent axial load during phases 1 … n	(N)
F_m	=	equivalent dynamic axial load	(N)
$n_1, n_2, \ldots n_n$	=	speeds in phases 1 … n	(rpm)
n_m	=	average speed	(rpm)
$q_{t1}, q_{t2}, \ldots q_{tn}$	=	discrete time step for $F_{eff\,1}, \ldots F_{eff\,n}$	(%)

Nominal service life

Service life in revolutions L

$$L = \left(\frac{f_{ac} \cdot C}{F_m}\right)^3 \cdot 10^6 \quad (4) \Rightarrow C = \frac{F_m}{f_{ac}} \cdot \sqrt[3]{\frac{L}{10^6}} \quad (5) \Rightarrow F_m = \frac{f_{ac} \cdot C}{\sqrt[3]{\frac{L}{10^6}}} \quad (6)$$

C	=	dynamic load rating	(N)
F_m	=	equivalent dynamic axial load	(N)
L	=	nominal service life in revolutions	(–)
f_{ac}	=	Correction factor for tolerance grades	

Service life in hours L_h

$$L_h = \frac{L}{n_m \cdot 60} \quad (7)$$

L_h	=	Service life	(hrs)
L	=	service life in revolutions	(–)
n_m	=	average speed	(rpm)

$$L_{h\ machine} = L_h \cdot \frac{DC_{machine}}{DC_{BASA}} \quad (8)$$

$DC_{machine}$	=	duty cycle of the machine	(%)
DC_{BASA}	=	duty cycle of the BASA	(%)
$L_{h\ machine}$	=	nominal service life of the machine	(h)
L_h	=	nominal service life of the ball screw assembly	(h)

Drive torque and drive power

You must check end machining for the maximum permissible torque

Drive torque M_{ta}
For conversion of rotary motion to linear motion

$$M_{ta} = \frac{F_L \cdot P}{2000 \cdot \pi \cdot \eta} \quad (9)$$

$$M_{ta} \leq M_p$$

F_L	=	thrust force	(N)
M_p	=	maximum permissible drive torque	(Nm)
M_{ta}	=	drive torque	(Nm)
P	=	lead	(mm)
η	=	mech. efficiency ($\eta \approx 0.9$)	(–)

Transmitted torque M_{te}
for conversion of linear motion into rotary motion:

$$M_{te} = \frac{F_L \cdot P \cdot \eta'}{2000 \cdot \pi} \quad (10)$$

$$M_{te} \leq M_p$$

F_L	=	thrust force	(N)
M_p	=	maximum permissible drive torque	(Nm)
M_{te}	=	transmitted torque	(Nm)
P	=	lead	(mm)
η'	=	mech. efficiency ($\eta' \approx 0.8$)	(–)

The dynamic drag torque must be taken into account for preloaded nut units.

Drive power P_a

$$P_a = \frac{M_{ta} \cdot n}{9\ 550} \quad (11)$$

M_{ta}	=	drive torque	(Nm)
n	=	speed	(rpm)
P_a	=	drive power	(kW)

⚠ With critical applications, you must pay attention to the information below.

Static load safety factor S_0
You must verify mathematically any structural design involving rolling contact with regard to the static load safety factor.

In this connection, $F_{0\ max}$ represents the maximum load amplitude that can occur, which can affect the screw drive.
It does not matter whether this load is exerted only for a short period.
It may represent the peak amplitude of an overall dynamic loading.
For design purposes, the data shown in the table applies.

$$S_0 = C_0 / (F_{0\ max}) \quad (12)$$

C_0	=	Static load rating	(N)
$F_{0\ max}$	=	Maximum static load	(N)
S_0	=	Static load safety factor	(-)

Design of the static load safety factor in relation to the operating conditions

Operating conditions	Static load safety factor S_0
Overhead arrangements and applications representing a high hazard potential	≥ 12
High dynamic load when at standstill, contamination.	8 - 12
Normal design of machinery and plant without full knowledge of the load parameters or connection details.	5 - 8
Full knowledge of all the load data. Vibration-free operation is ensured.	3 - 5

If there are health and safety hazards, protection against falling loads must be provided

Calculation

Calculation example service life

Operating conditions
The service life of the machine should be 40,000 operating hours with the BASA operating 60% of the time.

Proposed BASA: 40 x 10

F_1	=	25 000 N	at	n_1 =	10 rpm	for	q_1 =	6%	of the duty cycle
F_2	=	12 500 N	at	n_2 =	30 rpm	for	q_2 =	22%	of the duty cycle
F_3	=	4 000 N	at	n_3 =	100 rpm	for	q_3 =	47%	of the duty cycle
F_4	=	1 000 N	at	n_4 =	1000 rpm	for	q_4 =	25%	of the duty cycle
								100%	

Calculation procedure

Average torque n_m

$$n_m = \frac{6}{100} \cdot |10| + \frac{22}{100} \cdot |30| + \frac{47}{100} \cdot |100| + \frac{25}{100} \cdot |1000| \quad (1)$$

$$n_m = 304 \text{ rpm}$$

Equivalent dynamic axial load F_m for variable load and variable speed

$$F_m = \sqrt[3]{\left|25000\right|^3 \cdot \frac{|10|}{304} \cdot \frac{6}{100} + \left|12500\right|^3 \cdot \frac{|30|}{304} \cdot \frac{22}{100} + \left|4000\right|^3 \cdot \frac{|100|}{304} \cdot \frac{47}{100} + \left|1000\right|^3 \cdot \frac{|1000|}{304} \cdot \frac{25}{100}} \quad (3)$$

$$F_m = 4\,379 \text{ N}$$

Required service life L (revolutions)
The service life L can be calculated by transposing formulas (7) and (8):

$$L = L_h \cdot n_m \cdot 60$$

$$L_h = L_{h\ machine} \cdot \frac{DC_{BASA}}{DC_{machine}}$$

$$L_h = 40\,000 \cdot \frac{60}{100} = 24000 \text{ h}$$

$$L = 24\,000 \cdot 304 \cdot 60$$

$$L = 437{,}760{,}000 \text{ revolutions}$$

Basic dynamic load rating C

$$C = 4\,379 \cdot \sqrt[3]{\frac{437\,760\,000}{10^6}} \quad (5) \qquad C \approx 33\,250 \text{ N}$$

Result and selection
Now a selection can be made from the dimension tables:

e.g. ball screw assembly,
size 40 x 10 R x 7-4, with preloaded FEI-E-D single nut with flange and internal single recirculation,
dyn. load capacity C = 58,410 N,
with screw tolerance grade 5.

Attention:
Take into account the dynamic load rating of the screw end bearing used!

Cross-check
Now the following can be selected from the product tables:

Size 40 x 10 R x 7-4

FEI-E-D, with preload class C3
Load rating C_{dyn} = 58,410 N
Pre-tensioning force = 2,920 N

Cross-check
The following applies to the effective equivalent bearing load:

$$|F_n| > 2.8 \cdot F_{pr} \qquad F_{eff\,n} = |F_n|$$

$$|F_n| \leq 2.8 \cdot F_{pr} \qquad F_{eff\,n} = \left(\frac{|F_n|}{2.8 \cdot F_{pr}} + 1\right)^{\frac{3}{2}} \cdot F_{pr}$$

C	=	dynamic load rating	(N)
$F_{eff\,n}$	=	effective equivalent axial load during phase n	(N)
F_n	=	axial load during phase n	(N)
F_{pr}	=	pre-tensioning force (see tables on pages 80-83)	(N)

$2{,}8 \times F_{pr} = 2.8 \times 2\,920\ N = 8\,176\ N$

- $F_1 = 25\,000\ N > 8\,176\ N \Rightarrow F_{eff1} = 25\,000\ N$
- $F_2 = 12\,500\ N > 8\,176\ N \Rightarrow F_{eff2} = 12\,500\ N$
- $F_3 = 4\,000\ N < 8\,176\ N \Rightarrow F_{eff3} = \left(\frac{4\,000}{8\,176} + 1\right)^{1.5} \cdot 2\,920\ N = 5\,308\ N$
- $F_4 = 1\,000\ N < 8\,176\ N \Rightarrow F_{eff4} = \left(\frac{1\,000}{8\,176} + 1\right)^{1.5} \cdot 2\,920\ N = 3\,472\ N$

$$F_m = \sqrt[3]{|25000|^3 \cdot \frac{|10|}{304} \cdot \frac{6}{100} + |12500|^3 \cdot \frac{|30|}{304} \cdot \frac{22}{100} + |5308|^3 \cdot \frac{|100|}{304} \cdot \frac{47}{100} + |3472|^3 \cdot \frac{|1000|}{304} \cdot \frac{25}{100}}$$

$F_m = 5\,076\ N$

$$L = \left(\frac{58\,410}{5\,076}\right)^3 \cdot 10^6 = 1\,524 \cdot 10^6 \text{ revolutions}$$

$$L_h = \frac{1\,524 \cdot 10^6}{304 \cdot 60} = 83{,}553 \text{ hours}$$

The service life of BASA (with preload class C3) exceeds the required service life of 40,000 x 60% = 24,000 hours. This means that it is possible to choose a smaller BASA, subject to a review of it being undertaken.

Critical speed n_{cr}

The critical speed n_{cr} depends on the diameter of the screw, the type of end fixity, and the free length l_{cr}. No allowance must be made for guidance by a nut with backlash. The operating speed should not be more than 80% of the critical speed. The characteristic speed and the max. permissible linear speed must be taken into account, see “Technical notes” on page 72.

End fixity	**I**	**II**	**III**	**IV**
f_{ncr} - value	27.4	18.9	12.1	4.3

Example

Screw diameter = 40 mm Length l_{cr} = 2000 mm
End fixity II (fixed bearing - floating bearing)
According to the graph, the critical speed is 1800 rpm. The permissible operating speed is 1800 rpm x 0.8 = 1440 rpm. The maximum operating speed in our calculation example of n_4 = 1000 rpm is therefore below the permissible operating speed.

End fixity I
Fixed bearing - Fixed bearing

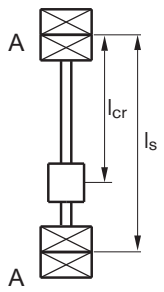

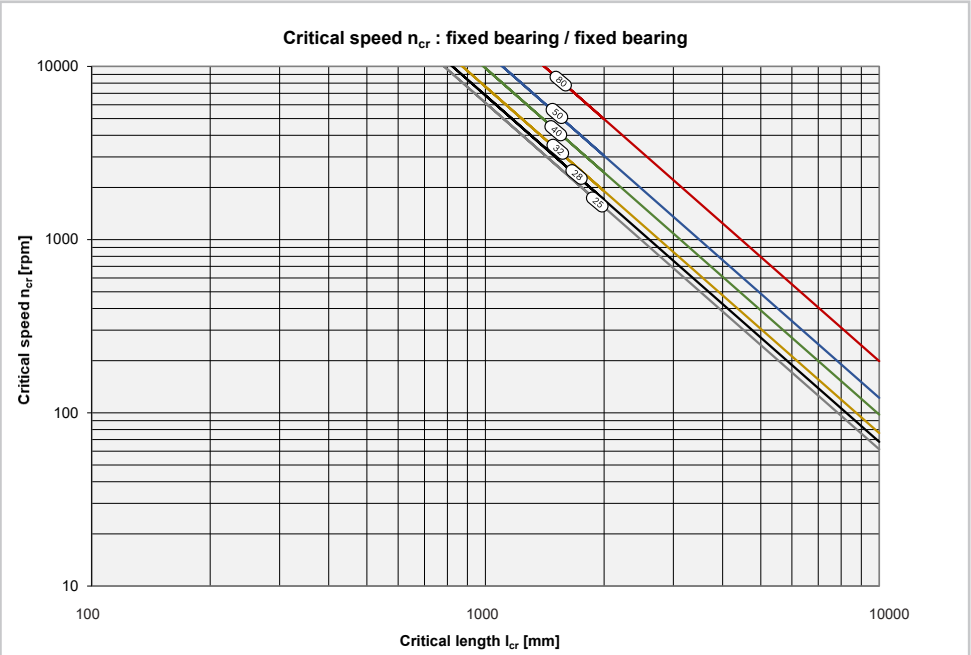

End fixity II
Fixed bearing - Floating bearing

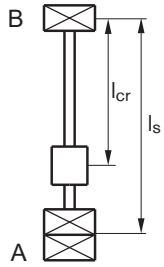

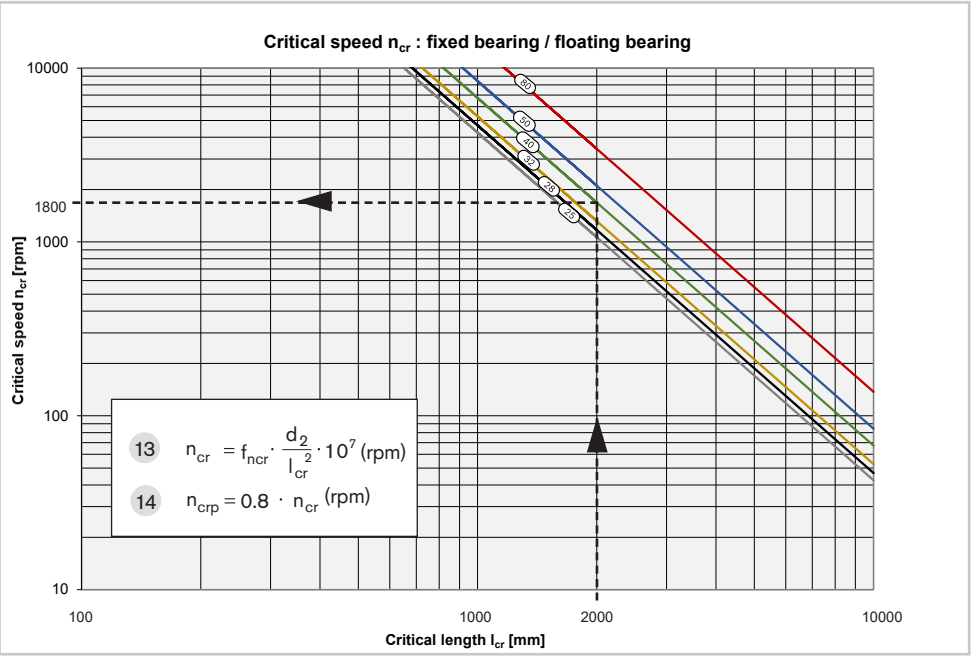

n_{cr}	=	Critical speed	(rpm)
n_{crp}	=	Permissible operating speed	(rpm)
f_{ncr}	=	Coefficient determined by bearing	
d_2	=	Root diameter of screw (see dimension tables)	(mm)
l_{cr}	=	Critical length for preloaded nut systems	(mm)
l_s	=	Bearing - bearing distance	(mm)

A = Fixed bearing
B = Floating bearing
C = Without bearing

Attention: End fixity IV (fixed-floating) – only recommended for short overall lengths if installed horizontally. For longer overall lengths, the floating end must be supported. Please contact our specialist department if you have any questions.

End fixity III
Floating bearing - Floating bearing

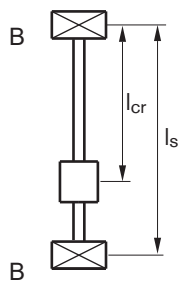

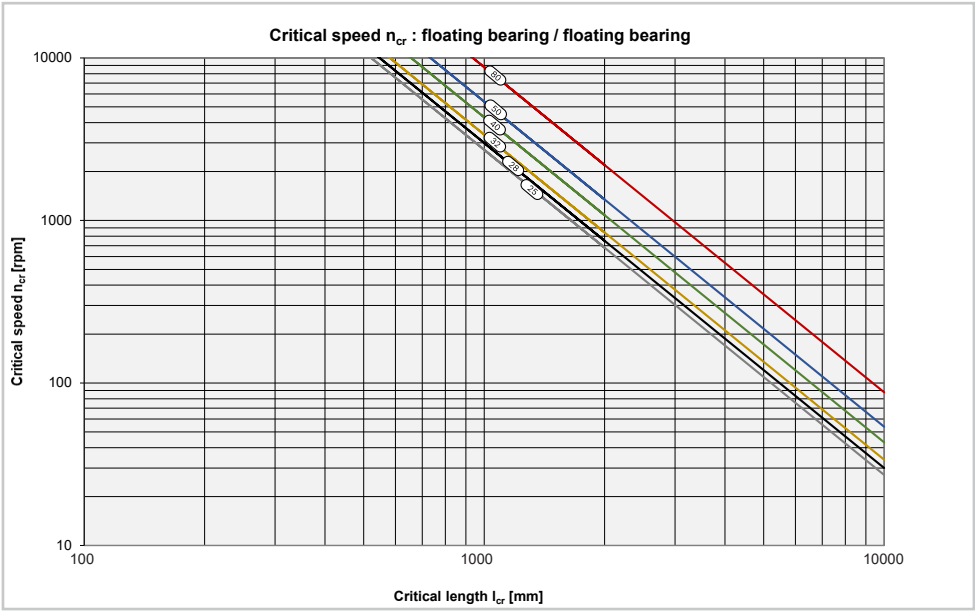

End fixity IV
Fixed bearing - without bearing

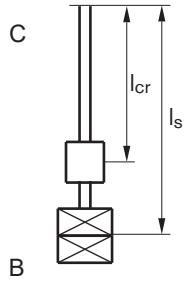

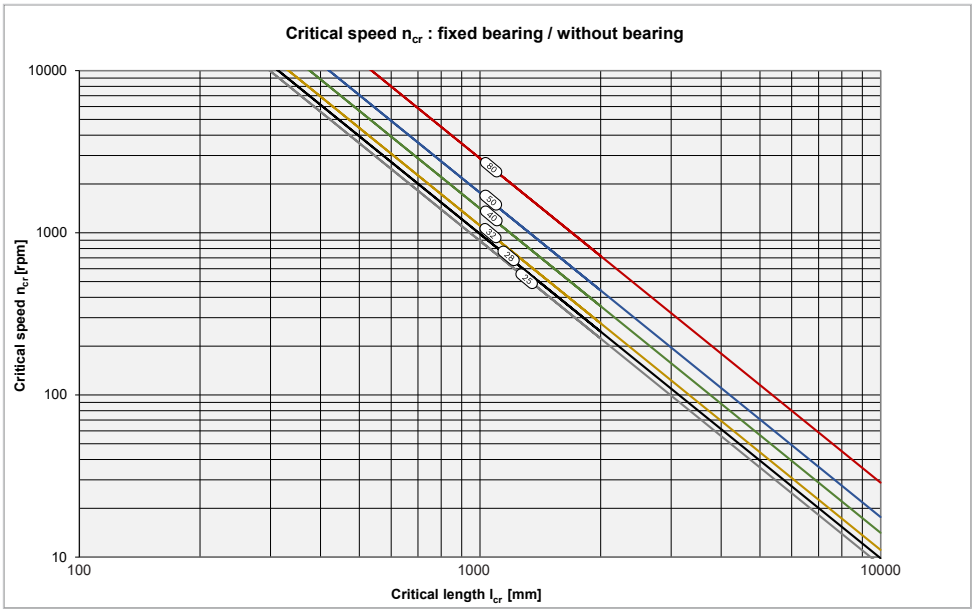

Permissible axial load on screw F_c (buckling load)

The permissible axial load on the screw F_c depends on the diameter of the screw, the type of end fixity, and the effective unsupported length l_c. A safety factor of $s \geq 2$ should be taken into account for axial loading.

Example

Screw diameter = 40 mm, Lead = 10 mm, Length l_c = 2000 mm
End fixity IV (fixed bearing - floating bearing) According to the graph, the theoretically permissible axial load is 80 kN. Applying the safety factor 2 yields a permissible axial load on the screw in operation of 80 kN : 2 = 40 kN. This therefore lies above the maximum operating load of F_1 = 25 kN used in our calculation example.

End fixity:	coefficient f_{Fc}	
	nut fixed	nut floating
A – A 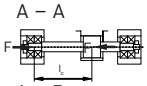 A – B 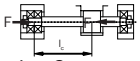 A – C 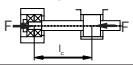	End fixity I 39.7	End fixity IV 20.3
B – B 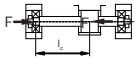	End fixity II 20.3	End fixity V 9.9
A – C 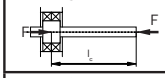	End fixity III 2.5	
A – C 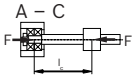		End fixity VI 2.5

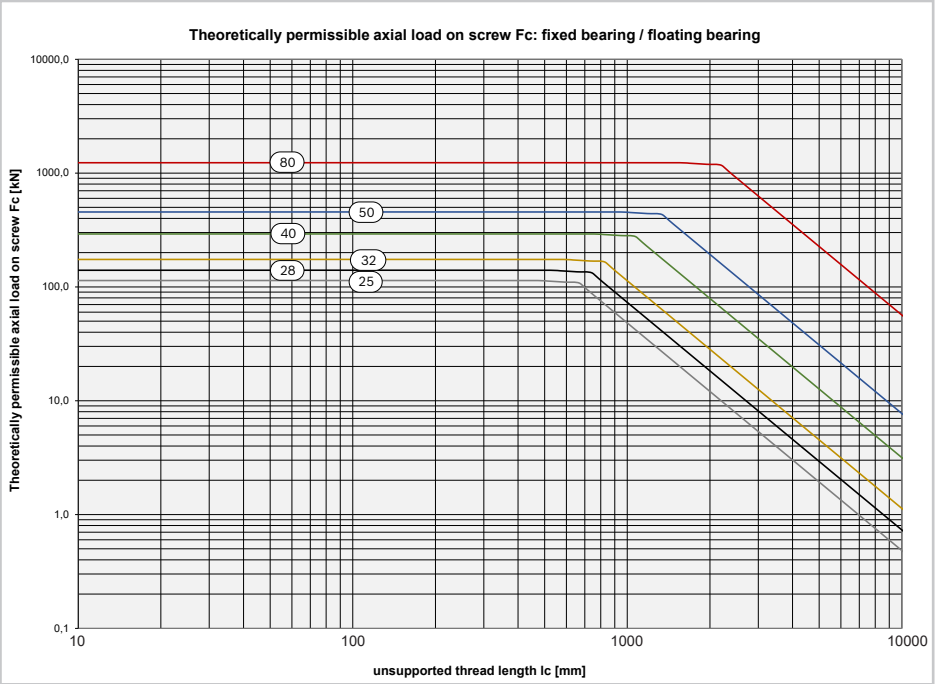

End fixity:

A = fixed bearing
B = floating bearing
C = without bearing

f_{Fc} value	End fixity
2.5	III / VI
9.9	V
20.3	II / IV
39.7	I

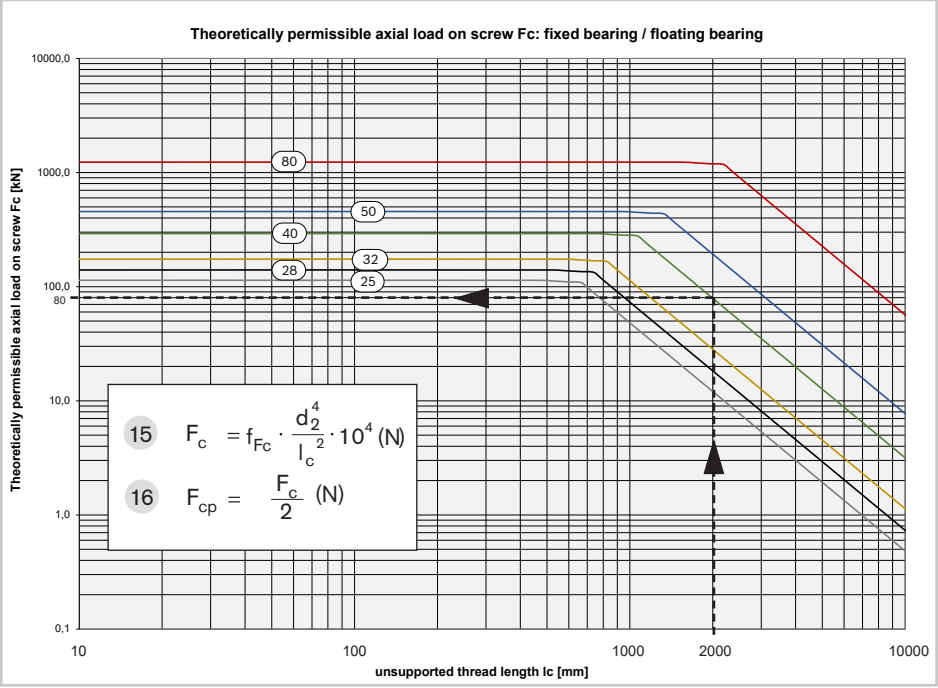

15 $F_c = f_{Fc} \cdot \frac{d_2^4}{l_c^2} \cdot 10^4$ (N)

16 $F_{cp} = \frac{F_c}{2}$ (N)

F_c = Theoretically permissible axial load on screw (N)
F_{cp} = Permissible axial load on screw during operation (N)
f_{Fc} = Corrector value determined by bearing
d_2 = Root diameter of screw, see dimension tables (mm)
l_c = unsupported thread length (mm)

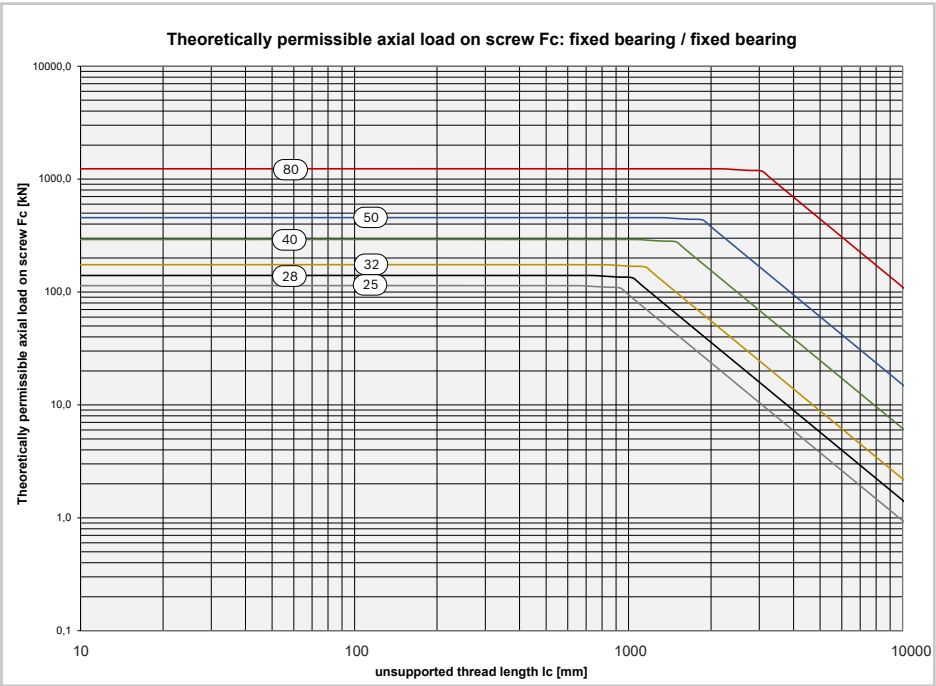

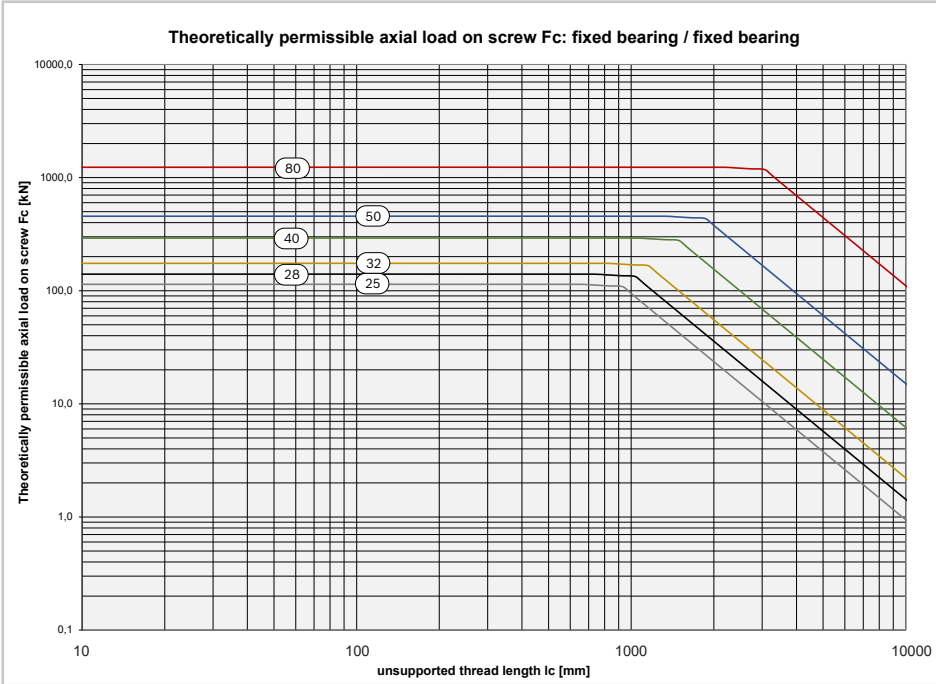

Notes on buckling

The effective buckling length l_c of the screw is the maximum unsupported screw length in the direction of the force's flow between the nut unit and the fixed bearing (center-to-center distance) or between the nut unit and the screw end.

For buckling load calculations, the nut is taken into consideration as a bearing.

For "nut fixed," the following conditions must be met:
- zero-backlash nut,
- rigid attachment of the nut to the linear guide,
- the nut unit is not subjected to moment loads, i.e. a linear guide absorbs any arising moments,
- no distortive stresses due to external factors (for example, temperature).

In linear motion systems from Bosch Rexroth, the nut can be considered to be a fixed bearing.
If one or more of the conditions for "nut fixed" are not met, the appropriate coefficients for "nut floating" must be used instead.

Case III occurs in applications with driven nuts, for example, when the nut is stationary and the screw rotates. The nut can then be regarded as a fixed bearing.
Case VI arises only when the nut unit is not supported by any linear guide.

Design notes, installation

Bearing design

For customer machining, please consider the design notes for screw ends and housings.
For Rexroth screw end designs, see “End Machining Details.”
Rexroth delivers complete drive systems including bearing units without housing. Calculations are performed with the formulas used in the antifriction bearing industry.

Screw end

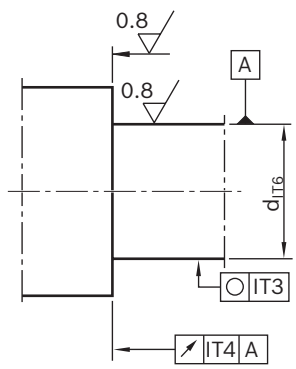

Housing

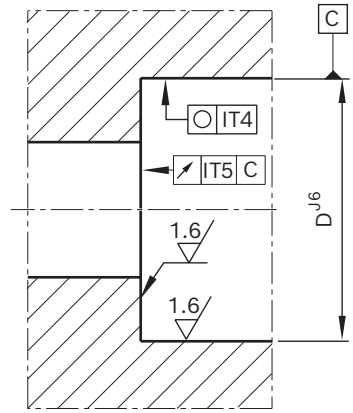

Mounting

Angular-contact thrust ball bearings and deep-groove ball bearings
When mounting the angular-contact thrust ball bearings LGF and LGN, ensure that the mounting forces are exerted only on the bearing rings. Never apply mounting forces via the anti-friction bearing elements or the seal rings! The two sections of the inner raceway may not be separated during assembly or disassembly for any reason!
Tighten the mounting screws for screw-down or flange-mounted bearings in crosswise sequence. The mounting screws may be subjected only to tension amounting to a maximum of 70% of their yielding point.
The screw-down (LGF) bearings have a groove on the cylindrical surface of the outer raceway for disassembly. The individual bearings of the bearing pair series LGF-C... and LGN-C... are marked on the cylindrical surfaces of the outer raceways (see figure). The markings reveal the bearing sequence. The sealing rings should face outwards after proper mounting.

Outer raceway markings for paired bearings

Slotted nut NMA, NMZ

The bearings are preloaded by tightening the nuts.
In order to prevent settling phenomena, we recommend first tightening the slotted nut by twice the value of the tightening torque M_A and then easing the load. Only then should the slotted nut be retightened to the specified tightening torque M_A.
The two set screws are then alternately tightened using a hexagon socket wrench.
The components are disassembled in the reverse order, i.e. the set screws have to be removed before the slotted nut.
The slotted nuts can be used several times when properly assembled and disassembled by competent personnel. The inner raceways of the bearings are dimensioned in such a way as to achieve a defined bearing preload sufficient for most applications when the slotted nut is tightened (M_A in accordance with dimension table).

Design Note

For counter holding the tightening torque MA of the slotted nut we recommend a wrench flat on the spindle or a hexagon socket on the end face of the spindle.

Mounting the housing

Housing mounting SEB

Tighten the fastening screws of the pillow-block bearings in a crosswise sequence. Refer to the table for the maximum tightening torque. The threaded ring fixes the complete bearing in the housing. Use thread-locking adhesive when assembling the threaded ring.

Size d_0xP	h (mm)	O_1 DIN 912	O_2 DIN 912	O_3, tapered pin (hardened) O_4, straight pin (DIN 6325)
25x10	14	M10x40	M12x30	10x50
28x16	14	M10x40	M12x30	10x50
32x10/16	14	M10x40	M12x30	10x50
40x10/12/16	16	M12x50	M14x35	10x50
50x20	16	M12x55	M14x35	10x60
80x20	22	M16x70	M20x50	12x80

⚠ **Align the screw with nut, the bearings and the guide such that they are completely flush with one another. The Rexroth gauge is suitable as an aid.**

Tightening

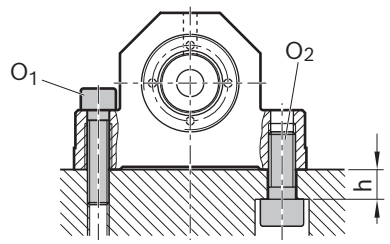

Locating pins

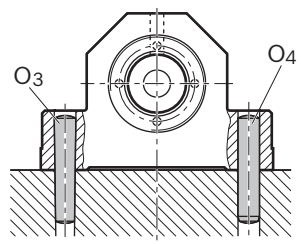

Tightening torques for fastening screws according to VDI 2230
where $\mu_G = \mu_K = 0.125$ (friction coefficient)

Steel/steel material pairing

	Strength class for O_1; O_2	M5	M6	M8	M10	M12	M14	M20
(Nm)	8.8	5.5	9.5	23	46	80	125	390
	12.9	9.5	16.0	39	77	135	215	650

Steel/aluminum and aluminum/ aluminum material pairings

	Strength class for O_1; O_2	M5	M6	M8	M10	M12	M14	M20
(Nm)	8.8	4.8	8.5	20	41	70	110	345
	12.9	4.8	8.5	20	41	70	110	345

Mounting screws

⚠ **Always make sure the screws are secure where there are high screw loads!**

Lubrication of the end bearings

Bearings for ball screw assemblies are in general lubricated with grease for a lifetime of reliable service. This does not apply to our LGS bearings which are unsealed and therfore unlubricated! It should be noted, that grease lubrication does not facilitate the dissipation of heat in the bearings. The bearing temperature should therefore not exceed 50 °C, particularly in machine tool applications. At higher temperatures circulating oil lubrication must be set up. Angular-contact thrust ball bearings of series LGF, LGN are lifetime-lubricated with KE2P-35 grease as per DIN 51825. For regreasing, the quantities stated in the table below can be applied via the lube ports provided on the bearings. Where there are pairs of bearings, please note that each bearing must be individually lubricated via the lube port. Each bearing must be lubricated with half the value shown in the table.The maximum interval can be assumed to be 350 million revolutions, in which case the larger of the two quantities should be used. As a rule, the initial grease quantity will therefore last for the entire service life of a ball screw assembly.

Relubrication quantities for angular-contact thrust ball bearings LGF, LGN

Abbreviation		Quantity (cm^3)	1)	Abbreviation		Quantity (cm^3)	1)	Abbreviation		Quantity (cm^3)	1)
LGN-B-0624		0.33	0.22								
LGN-B-1034		0.33	0.22								
LGN-B-1242	LGF-B-1255	0.43	0.33								
LGN-B-1747	LGF-B-1762	0.54	0.43								
LGN-B-2052	LGF-B-2068	0.87	0.54								
				LGN-C-2557	LGF-C-2575	2.17	1.3				
LGN-B-3062	LGF-B-3080	1.09	0.65	LGN-C-3062	LGF-C-3080	2.17	1.3				
LGN-B-3572	LGF-B-3590	1.74	0.98								
								LGN-A-4090	LGF-B-40115	6.52	3.80
								LGN-A-50110	LGF-A-50140	9.78	5.98

1) Shortened lubricating interval max. 10 M revolutions
2) Where there are pairs of bearings, lubricate each bearing via the lube port.
Lubricate each bearing with half the value shown in the table.

Angular-contact thrust ball bearings of series LGS are unseald and therefor unlubricated.
For initial greasing, the quantity stated in the table below is to be applied to each bearing.

Initial lubrication quantities for angular-contact thrust ball bearings LGS

Abbreviation		Quantity (cm^3)
LGS-E-1030		1.09
LGS-E-1232		2.17
LGS-E-2047	LGS-E-1747	3.26
LGS-E-3072		7.61
LGS-E-3580		8.70
LGS-E-4090		10.87
LGS-E-50110		16.30
LGS-E-60130		21.74

Calculation

Resulting and equivalent bearing loads

For angular-contact thrust ball bearings LGN and LGF

Angular-contact thrust ball bearings are preloaded. The chart shows the resulting axial bearing load F_{ax} as a function of preload and axial operating load F_{Lax}.
For a purely axial load $F_{comb} = F_{ax}$.

α = 60°	X	Y
$\frac{F_{ax}}{F_{rad}} \leq 2.17$	1.90	0.55
$\frac{F_{ax}}{F_{rad}} > 2.17$	0.92	1.00

α = pressure angle
F_{ax} = resulting bearing load
F_{Lax} = operating load
X, Y = dimensionless factor

If the radial operating forces are not insignificant, the equivalent bearing loads are calculated according to formula 20.
Bearings for ball screw assemblies are also suitable to accommodate tipping forces. The moments that usually occur due to the mass and drive motion of the screw do not generally need to be included in the calculation of the equivalent bearing load.

$$F_{comb} = X \cdot F_{rad} + Y \cdot F_{ax} \quad (20)$$

F_{ax} = resulting axial bearing load (N)
F_{comb} = combined equivalent bearing load (N)
F_{rad} = radial bearing load (N)

Internal preload limit and resulting bearing load

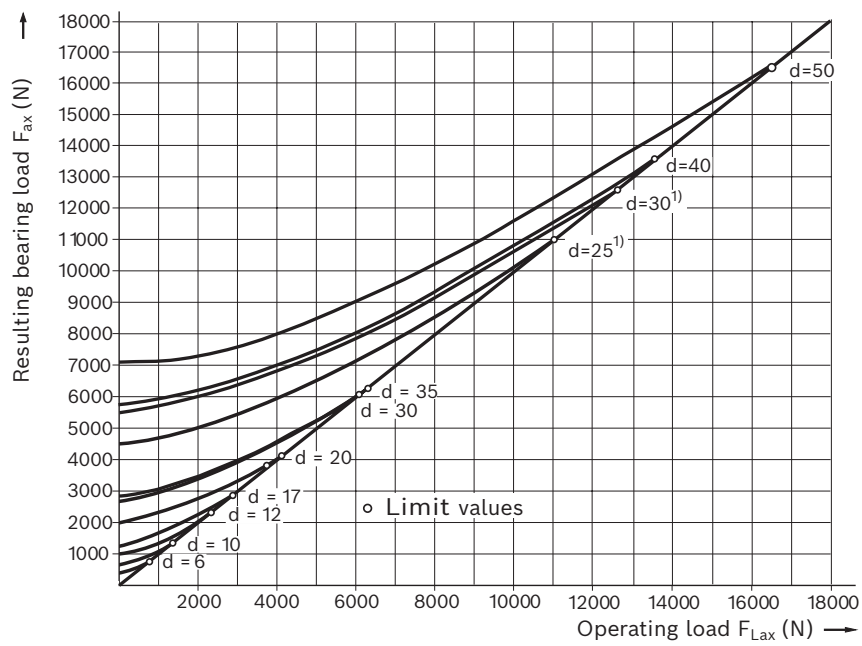

1) Four row version

Permissible static axial load for bearing series LGF

The permissible static axial load of LGF series bearings in screw-down direction is:

$$F_{0ax\ p} \leq \frac{C_0}{2}$$

$F_{0ax\ p}$ = permissible static axial bearing load (N)

The static axial load rating C_0 is stated in the Dimension Tables.

⚠ **Separate technical dimensioning to determine the limit values is absolutely necessary for all attachments (e.g. pillow block units, bearing assembly, etc.)**

Calculation

Resulting and equivalent bearing loads

$$F_{comb} = X \cdot F_{rad}^{A} + Y \cdot F_{ax}^{B} + Z \quad (21)$$

F_{ax} = axial bearing load (N)
F_{comb} = combined equivalent bearing load (N)
F_{rad} = radial bearing load (N)
X, Y, Z = calculation factors (–)
A, B = exponents (–)

Bearing size	X	Y	Z	A	B
LGL-D-0624	0.003	0.1300	140	1.90	1.40
LGL-A-1244	0.076	0.0460	580	1.28	1.30
LGL-A-1547	0.022	0.0110	540	1.45	1.50
LGL-A-2060	0.017	0.0082	960	1.45	1.50

For angular-contact thrust ball bearings LGL
Before determining the combined equivalent load, F_{comb}, you must check the bearing size for the static limit load using the diagram. In this connection, the intersection point of the axial and radial bearing load must be below the muss boundary for a bearing to be suitable for the application.

Static limit load

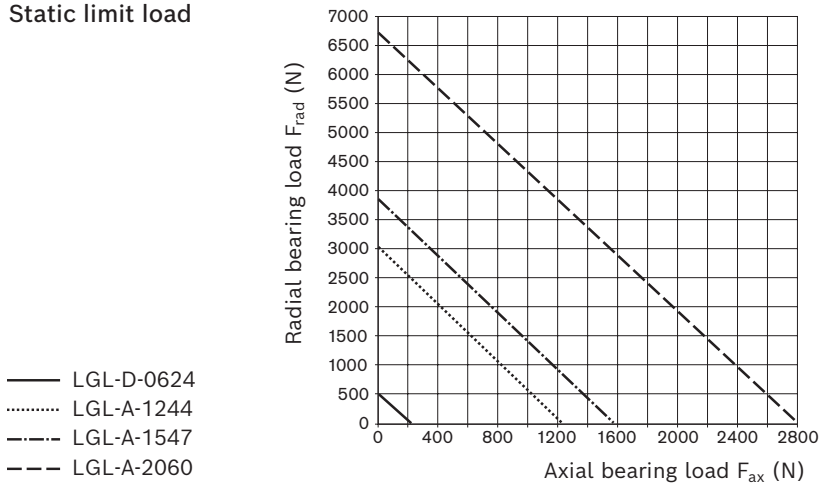

Average speed and average bearing load
When the bearing load varies in steps over a specific period of time (22), calculate the dynamic equivalent bearing.
When the speed varies, use formula (23). In these formulas q_t denotes the discrete time steps for the individual phases in %.

$$F_m = \sqrt[3]{F_{comb1}^{3} \cdot \frac{|n_1|}{n_m} \cdot \frac{q_{t1}}{100} + F_{comb2}^{3} \cdot \frac{|n_2|}{n_m} \cdot \frac{q_{t2}}{100} + \ldots + F_{combn}^{3} \cdot \frac{|n_n|}{n_m} \cdot \frac{q_{tn}}{100}} \quad (22)$$

$$n_m = \frac{q_1}{100} \cdot n_1 + \frac{q_2}{100} \cdot n_2 + \ldots + \frac{q_n}{100} \cdot n_n \quad (23)$$

$F_{comb1} \ldots F_{combn}$ = combined equivalent axial load in phases 1 … n (N)
F_m = equivalent dynamic axial bearing load (N)
$n_1 \ldots n_n$ = speeds in phases 1 … n (rpm)
n_m = average speed (rpm)
$q_{t1} \ldots q_{tn}$ = discrete time steps in phases 1 … n (%)

Service life and load safety factor

$$L = \left(\frac{C}{F_m}\right)^3 \cdot 10^6 \quad (24)$$

Nominal service life
The nominal service life is calculated as follows:

$$L_h = \frac{16\,666}{n_m} \cdot \left(\frac{C}{F_m}\right)^3 \quad (25)$$

C = dynamic bearing load rating (N)
F_m = equivalent dynamic axial bearing load (N)
L = nominal service life in revolutions (–)
L_h = nominal service life in operating hours (h)
n_m = average speed (rpm)

Attention:
Pay attention to the dynamic load rating of the nut!

Static load safety factor
The static load safety factor for machine tools should not be lower than 4.

$$S_0 = \frac{C_0}{F_{0max}} \quad (26)$$

F_{0max} = maximum static load (N)
C_0 = static load capacity (N)
S_0 = static load safety factor (–)

Company: _____
Contact: _____
E-mail: _____
Telephone: _____

Bosch Rexroth
Linear Motion Technology

97419 Schweinfurt / Germany

Find your local contact person here: www.boschrexroth.com/adressen

Application

New design ☐ Revised design ☐

Operating conditions

Discrete time step parameters			or	Dynamic cycle parameters											
Discrete time steps (%)	Speed (1/min)	Action of force x	Section	T1	T2	T3	T4	T5	T6	T7	T8	T9	T10	T11	T12
T_1 =	n_1 =		Path (mm)												
T_2 =	n_2 =		V (m/s)												
T_3 =	n_3 =		a (m/s^2)												
T_4 =	n_4 =		Time (s)												
T_5 =	n_5 =		Action of force x												
T_6 =	n_6 =														

	F1	F2	F3	F4	F5	F6
Forces (N) =						
	m1	m2	m3	m4	m5	m6
Mass (kg) =						

Bearing center-to-center distance	(mm) =		or	Max. stroke	(mm) =	

Bearing type

1. ☐ Tight

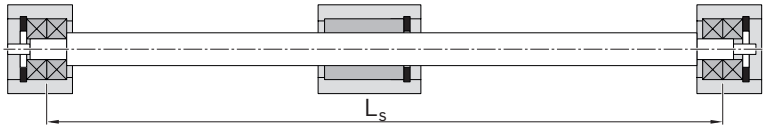

Tight

Installation Position
Horizontal ☐
Vertikal ☐

2. ☐ Tight

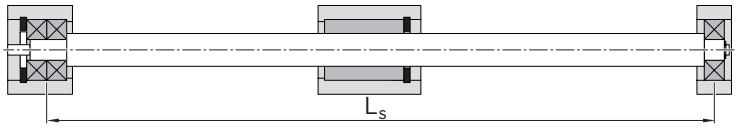

Loose

Drawing enclosed (recommended) ☐

3. ☐ Tight

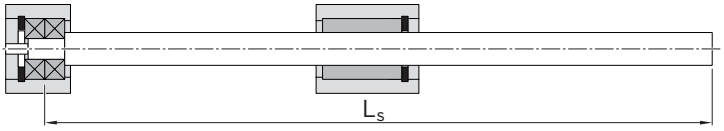

Free

Delivery with bearing ☐

Required life: Operating temperature: °C Up to °C

Type of lubrication:

Short description of the application / unusual operating conditions:

Visit out official homepage and use the provided configurators and our dimensioning program Linear Motion Designer free of charge.

Bosch Rexroth AG
Ernst-Sachs-Straße 100
97424 Schweinfurt, Deutschland
Tel. +49 9721 937-0
Fax +49 9721 937-275
www.boschrexroth.com

Find your local contact person here:
www.boschrexroth.com/contact

R999002360/2024-02
© Bosch Rexroth AG 2024
Subject to changes!

The data specified above only serves to describe the product.
Since our products undergo continuous further development, no statement regarding any particular quality or suitability for any particular use can be derived from this information. The information does not release the user from making his/her own inspections and evaluations. It should be noted that our products are subject to a natural process of aging and wear and tear.