Selection Table of ABPAC

Prepared by: DJ Nam Date: 2018-07-26

A. ABPAC

Type: **ABPAC-0250/A10VSO028/HYO**

Specification: To be determined

B. Hydraulic Pump Type:

Type	Displacement	Regulator	Seal	
A10VSO	28	DFR1	P	NBR

37

Bell Housing		Coupling	Foot Flange
Aluminum	KTR	KTR	KTR

Selection Guide I: A10VSO - 28 - DFR1 - P
Selection Guide II: A10VSO 28

MNR: R910910590
Specification: A A10VSO 28 DFR1/31R-PPA12N00

Notice
1. Input only in Yellow cell
2. After calculation, check selection is correct!

C. Electric Motor Type

Manufacturer	Power	Voltage	Frequency	Pole	Installation	IP	Efficiency	Insullation	Temp Rise	Cert
HYO	18.5	220	60	4P	B35	55	IE3	F	B	NA

Selection Guide I: HYO - 18.5kW x 220V, 60Hz x 4P x B35, IP55, IE3 (NA)
Selection Guide II: HYO - 18.5kW x 4P x B35

기동방식	Housing
Y-D	주물

MNR: T.B.D
Specification: T.B.D

D. Accessories

Hydraulic Pump Type: A10VSO 28 2
Electric Motor Type: HYO - 18.5kW x 4P x B35

Description	Selection Guide	MNR	Specification
Coupling Hub (Pump):		R901432900	ROTEX 42 GG Hub 1.0 Ø22H7 key DIN 6885/1-JS9
Coupling Hub (Motor):		R901396165	ROTEX 42 GG Hub 1.0 Ø48H7 key DIN 6885/1-JS9
Spider:		R987405254	ROTEX 42 Spider 92 Sh-A =T-PUR®= orange
Bell Housing		N/A	PK 400/4/46
Foot Flange	N/A	N/A	N/A
Strip		T.B.D	T.B.D
Damping Bearing		T.B.D	T.B.D

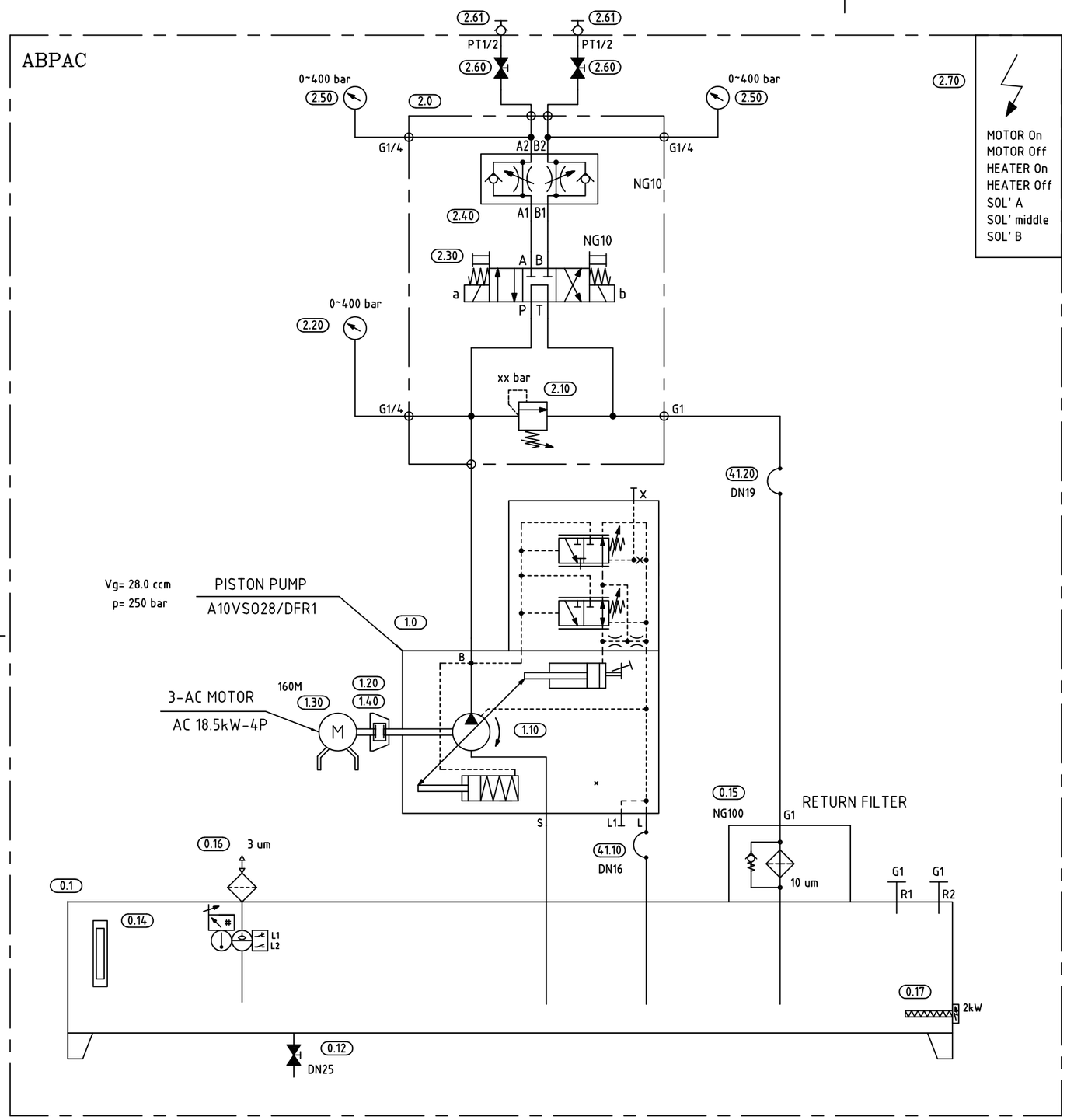

ABPAC B.O.M

NO	ITEM	SPECIFICATION	Q'TY	MAT NO.	MAKER
0.1	OIL TANK	250 LITER	1		REXROTH
0.12	BALL VALVE	DN25	1	R901261671	REXROTH
0.13	INSPECTION COVER	324A	1	R900543908	REXROTH
0.14	OIL GAUGE	AB31-21/127	1	R900007824	REXROTH
0.15	RETURN FILTER	10TEN0100-H10XLA00-P2,2-M-R4	1	R928041275	REXROTH
0.16	LEVEL SWITCH/AIR FILTER/ TEMP' SWITCH & MONITOR	ABZMS-37-1X/0370-03-M-K24	1	R901113688	REXROTH
0.17	IMMERSION HEATER	AB32-10/6 D 400	1	R900024797	REXROTH
1.0	ASSEMBLY	MOTOR PUMP ASSEMBLY	1		
1.10	PISTON PUMP	A10VSO 28 DFR1/31R-VPA12N00	1	R910916805	REXROTH
1.20	COUPLING	AB33-22/KD 42-22/48	1		KTR
1.30	ELE' MOTOR	18.5KWx4Px220Vx60Hz (IE3,B3B5)	1		HYOSUNG
1.40	BELL HOUSING	AC PBR 100AS2H/A 350/204-1X/JH-AL	1		KTR
2.0	ASSEMBLY	SAFETY & CONTROL BLOCK ASSEMBLY	1		REXROTH
2.10	RELIEF VALVE	DBDS 6 K1X/315	1	R900423725	REXROTH
2.20	PRESSURE GAUGE	ABZMM 63- 400BAR/MPA-U/V-G	1	R900053460	REXROTH
2.30	SWITCHING SOL' VALVE	4WE 10 G5X/EG205N9K4/M	1	R901336185	REXROTH
2.40	FLOW CONTROL VALVE	Z2FS 10-5-3X/V	1	R900517812	REXROTH
2.50	PRESSURE GAUGE	ABZMM 63- 400BAR/MPA-U/V-G	2	R900053460	REXROTH
2.60	STOP VALVE	PKH-DN13-G1/2-112A	2		MHA
2.61	QUICK COUPLER	KSC PT1/2	2		KWANKWANG
2.70	O/P PANNEL		1		REXROTH
41.0	HOSE ASSEMBLY		1		REXROTH
41.10	HOSE SET		1		REXROTH
41.20	HOSE SET		1		REXROTH

NOTE

1. FLUID : mineral oil
2. MOTOR POWER : 18.5KW X 4P X AC220V X 60HZ X IE3
   SOLENOID VOLTAGE : xxxx
3. WORKING PRESSURE : 250 bar
4. PIPING MATERIAL : CARBON STEEL, WALFORM

Index	created	checked	approv.	change note
B	2018.NDJ	2018.**	2018.**	*****

edge radii KS A ISO 13715 | KS B ISO 1101 shape and position tolerance KS B ISO 1101 | KS B 0052 welding symbol KS B 0052 | KS B ISO 2768-1/KS A ISO 8015 general machining tolerances KS B ISO 2768-1 Tolerierung/tolerances KS A ISO 8015 | KS A ISO 1302 surface finish KS A ISO 1302

finished size | weight in kg | customer YOU | sales order no. *****

Rexroth Bosch Group BOSCH REXROTH KOREA LTD.

Semi FG No. XXXX | FG No. XXXX | Material No. XXXX XXX

depart. Design | Document: AG | date | name

created 2018.02.26 D.J.NAM

checked XXXX XXXX

approv. XXXX XXXX

Index / A First issue

item name ABPAC-0250/A10VSO028/HYO | sheet:1 | of:1

Industrial Hydraulics | scale 1:1 | size A1 | drawing no. HS027-ABPAC 250 Liter-18kW

Diese Unterlage darf weder kopiert noch dritten Personen zugaenglich gemacht werden. Schutzvermerk DIN34 beachten.
This document may not be copied or passed on to a third person. Copyright reserved
? ??? ?3??? ?? ?? ??? ? ????.

Aenderungen nur mit CAD zulaessig Revisions only permitted by CAD

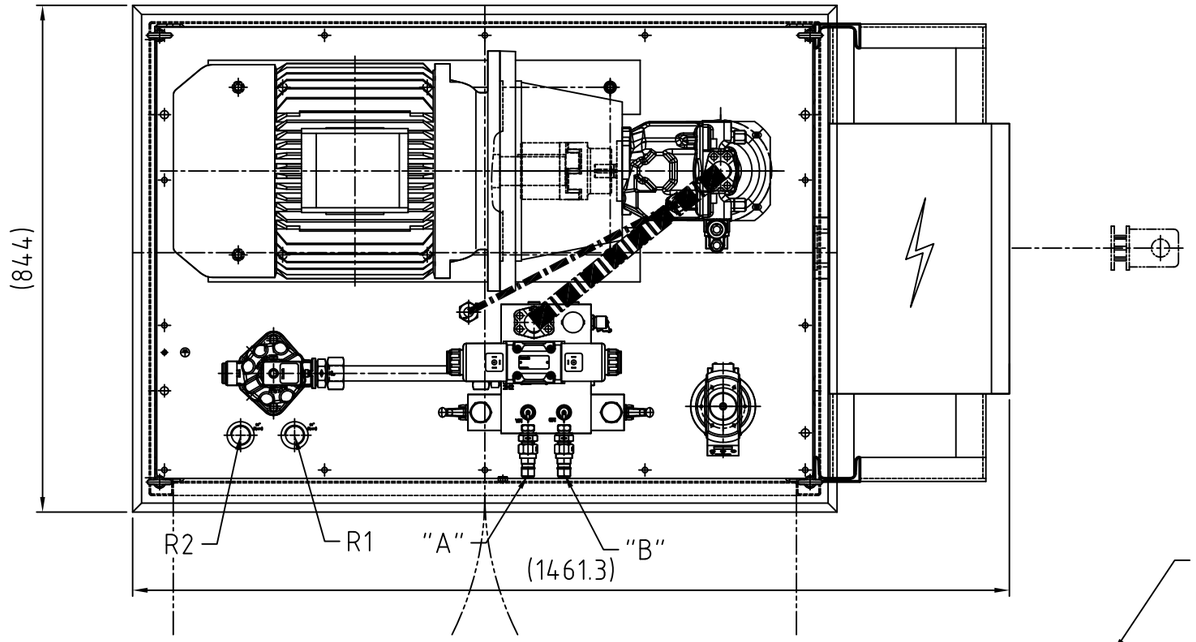

PORT	Specification	Remark
A	KSC PT 1/2M	KWANKWAN
B	KSC PT 1/2M	KWANKWAN
R1, R2	G1"	

각 PORT는 납품시 BLIND 또는 PLUG 처리 할 것!

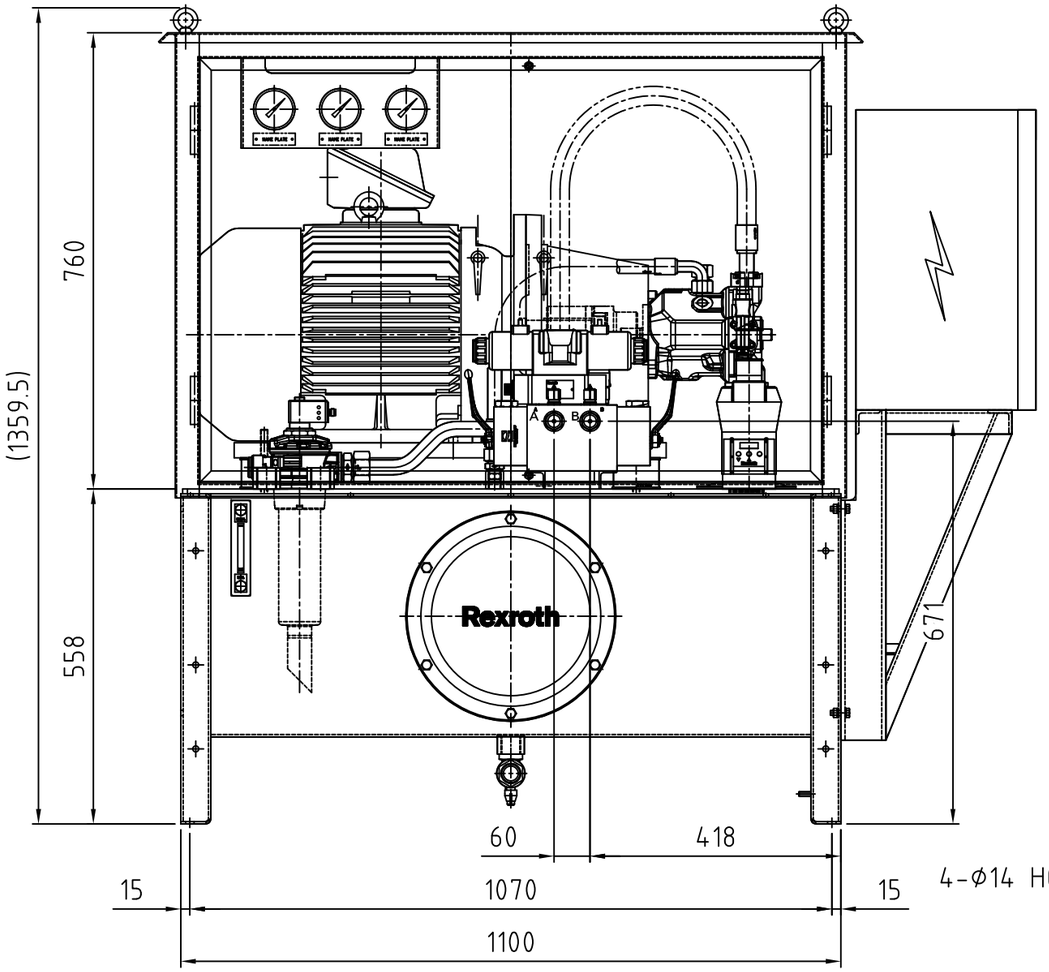

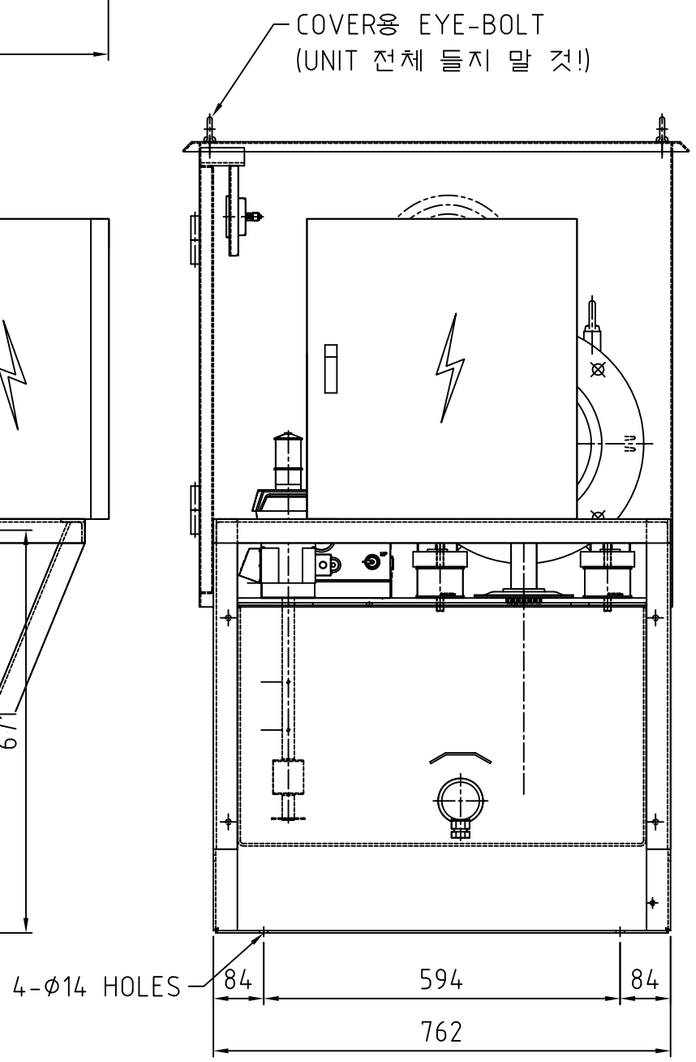

NOTE

1. FLUID : mineral oil
2. TANK CAPACITY : 250 Liters
3. MOTOR POWER : 18.5KW X 4P X AC220V X 60HZ X IE3
SOLENOID VOLTAGE : AC 220V
4. WORKING PRESSURE : 250 bar
5. PIPING MATERIAL : CARBON STEEL, WALFORM
6. WEIGHT : 530 Kg (Without oil)

Index	작성/created	검토/checked	승인/approv.	변경내용 / change note
	XXX	XXX	J.H.Lee	XXXXXX
	20xx.xx.xx	20xx.xx.xx	20xx.xx.xx	

일반모서리 edge radii KS A ISO 13715 | 형상공차 KS B ISO 1101 shape and position tolerance KS B ISO 1101 | 용접기호 KS B 0052 welding symbol KS B 0052 | 일반가공공차/공차 KS B ISO 2768-mK/KS A ISO 8015-mK general machining tolerances KS B ISO 2768-mK Tolerierung/tolerances KS A ISO 8015-mK | 표면거칠기 KS A ISO 1302 surface finish KS A ISO 1302

수주번호/sale order no.	N/A
고객/customer	DCKR
무게/weight in kg	530
	/blank

Rexroth Bosch Group 보쉬렉스로스 코리아 유한회사

열처리/treatment process

소재/material descr.(KS)

부서/depart.	Document:	FE
Design	날짜/date	이름/name
작성/created	2018.07.24	D.G.Lee
검토/checked	2018.07.25	D.Y.Bae
승인/approv.	2018.07.25	J.H.Lee
Index / A	첫번째도면/First issue	

품명/item name: ABPAC-0250/A10VSO028/HYO HPU assembly

장수/sheet: 01 | 총수/of: 01

Industrial Hydraulics

축척 scale 1:5 | 도면크기 size A1 | 도면번호/drawing no. FE027-ABPAC-G-XXX-A

Diese Unterlage darf weder kopiert noch anderen Personen zugänglich gemacht werden. Zuwiderhandlungen ziehen Schadenersatz nach sich.
This document may not be copied or passed on to a third person. Copyright reserved.
본 도면은 복제되거나 제3자 에게 전달될 수 없으며 모든 권리는 보호됩니다.

Aenderungen nur mit CAD zulaessig Revisions only permitted by CAD

효성 중공업	INDUCTION MOTOR DATA SHEET	HYOSUNG SHOP. MODEL NO. : 17TE-FJUN L-SPEC NO. : DSML11194M
SHEET 1 OF 1	CUSTOMER :	
FOR INFORMATION	JOB.NO : N/A	ITEM NO. :
SERVICE : N/A	SITE : -	QUANTITY : SETS

GENERAL DATA		
FRAME NO.	180M	
TYPE	TE-F	
ENCLOSURE	TE	
COLLING METHOD	FC(IC411)	
INSULATION CLASS	F	CLASS
TEMP. RISE AT FULL LOAD		
RES. METHOD :	80	˚C
LOCATION	INDOOR	
ALTITUDE	1000	
HUMIDITY	80	
AMBIENT TEMP.	40	˚C
EXPLOSION PROOF TYPE	N/A	
MOUNTING	B35	
BEARING TYPE	ANTI-FRICTION	
NDE/DE BRG. NO.	6310ZZ	
BRG. LUBRICATION	N/A	
PROTECTION GRADE		
SERVICE FACTOR	1.15	
DRIVE	DIRECT COUPLED	
SHAFT		
EXTENTION :	SINGLE	
EXTERNAL THRUST :	N/A	
NOISE LEVEL(MEAN VALUE AT 1m FROM MOTOR)		
NO-LOAD :	N/A	
VIBRATION	N/A	
NUMBER OF CONSECUTIVE STARTS	N/A	
ROTATION(VIEWED FROM DE)	C.C.W	

PERFORMANCE DATA		
OUTPUT	18.5	kW
POLES	4	P
ROTOR TYPE	SQUIRREL CAGE	
STARTING METHOD		
PHASE	3	PHASE
FREQUENCY	60	Hz
PRIMARY		
VOLTAGE :	220/380	V
NO LOAD CURRENT :	25.8/14.9	A
FULL LOAD CURRENT :	63.3/36.6	A
LOCKED-ROTOR CURRENT :	560	%
EFFICIENCY		
AT 1/2 LOAD :	91.6	%
AT 3/4 LOAD :	92.6	%
AT FULL LOAD :	93.6	%
POWER FACTOR		
AT 1/2 LOAD :	67	%
AT 3/4 LOAD :	77	%
AT FULL LOAD :	82	%
TORQUE		
FULL LOAD :	10.2	kg-m
	100.1	N-m
LOCKED ROTOR :	160	N-m
BREAKDOWN :	210	N-m
MOTOR GD²	0.991	kg-m²
MAX LOAD GD² AT MOTOR SHAFT	42	kg-m²
MOTOR APPROX. WEIGHT	223	kg
PAINTING(MUNSELL NO.)	0.5PB 3.2/4.4 (ENAMEL)	

ACCESSORIES(OPTIONAL)	
TEMPERATURE DETECTOR	
WINDING	NO
TYPE	-
BEARING	NO
TYPE	-
SPACE HEATER	NO
RATING	-
APPLICATION STANDARDS	IEC60034-1

SUBMITTAL DRAWINGS	
OUTLINE DIMENSION	ES1AS14010
CONDUIT BOX & COVER	ES1B100103
SPEED-TORQUE & CURRENT CURVE	DSML11194M
THERMAL LIMIT & TIME-CURRENT CURVE	DSML11194M
LOAD vs POWER FACTOR & EFFICIENCY	DSML11194M

<NOTE>
1. THESE DATA ARE ONLY DESIGN VALUES AND SHALL BE GUARANTEED WITH TOLERANCE OF APPLICATION STANDARD.
2. EXCEPT FOR STATEMENTS

<REMARKS>
1. 1. ABOVE ALL DATA ARE CALCULATED AT 100% VOLTAGE.
2. 2. PREMIUM EFFICIENCY