rexroth
A Bosch Company

GoTo™ North America Focused Delivery Program Hydraulics

EDITION 07.2021
Supercedes all other revisions and copies

GoTo™

World-class technology without the wait

Whether you're designing and building machines, implementing them in your factory, or servicing them, the GoTo Program is ready to work for you.

GoTo Product Overviews

▶ **Electric Drives and Controls**

▶ **Tightening Technology**

▶ **Industrial and Mobile Hydraulics**

▶ **Linear Motion Technologies**

▶ **Assembly Technologies**

The GoTo Focused Delivery Program offers a targeted selection of our high-demand products with short lead times and high availability. As a result, you receive your products quickly and reliably, allowing you to be agile and responsive in your own markets.

You benefit from simplified access to product information, preferred order processing and reduced delivery times. This allows you to complete your machine or system on schedule.

Our GoTo product overviews, whether in printed form or on the Internet, show you the complete portfolio. In addition, our webpages quickly provide you with additional information on the respective product, on the technical data as well as on ordering.

www.boschrexroth-us.com/gotoEDC
www.boschrexroth-us.com/gotoTighteningSystems
www.boschrexroth-us.com/gotoHydraulics
www.boschrexroth-us.com/gotoLinear
www.boschrexroth-us.com/gotoFraming

Hydraulics GoTo Catalog

Bosch Rexroth is pleased to present our Hydraulics GoTo Product catalog as part of our GoTo Focused Delivery Program.

The GoTo Focused Delivery Program streamlines everything to make it easier for you to get a selection of our most popular Rexroth products faster. You'll benefit from quicker access to product information, reliable lead times that meet or beat the expectations of the market, and enhanced customer service.

The same GoTo product portfolio is now available in the United States, Canada, and Mexico. With the same quantities and lead times (from order acceptance to shipment in business days), GoTo is even easier to use.

For additional information on the GoTo Program and a complete list of other quality Rexroth products available in the Focused Delivery Program just go to:

USA: www.boschrexroth-us.com/GoTo
Canada: www.boschrexroth.ca/GoTo
Mexico: www.boschrexroth.com.mx/GoTo

GoTo™ Focused Delivery Program

GoTo Focused Delivery Program

Your local GoTo contact:

GoTo Program Delivery Conditions

How to place a GoTo order directly with Bosch Rexroth

Please clearly state “GoTo” on the purchase order, and ensure that all GoTo items are within the maximum GoTo quantity.

For products with a published lead time of one (1) business day, the ship date will be the following day, provided:
- the following day is a business day
- the order is placed by 1 PM (EST)

The contents of a GoTo order may not ship as a complete delivery and will not be shipped via the customer defined consolidation point / day.

All items subject to prior sale. It is advisable to confirm critical delivery requirements at time of order. All sales subject to Bosch Rexroth Terms & Conditions of sales for your country, which you can read at:

www.boschrexroth-us.com or
www.boschrexroth.ca or
www.boschrexroth.com.mx

Bosch Rexroth reserves the right to make program changes at any time without notice, and to limit GoTo orders and material quantities.

WARNING!

Failure, improper selection or improper use of the products and/or systems described herein or of related items may cause personal injury or property damage.

This document and other information from Bosch Rexroth Corporation, Bosch Rexroth Canada Corporation, and Bosch Rexroth S.A. de C.V., including its divisions, provide products and/or system options for further investigation by users having technical expertise. It is important that you analyze all aspects of your application and review the information concerning the products or systems in Rexroth’s Data Sheets. Due to the variety of operating conditions and applications for these products or systems, the user, through his own analysis and testing, is solely responsible for making the final selection of the products and systems, and assuring that all performance, safety and warning requirements are met.

The products described herein, including without limitation, product features, specifications, designs and pricing are subject to change at anytime without notice.

Table of Contents

Pumps	
A1VO (Series 10) - Variable Displacement Pumps	**13**
A10V(S)O & (A)A10VSO (Series 31) - Variable Displacement Pumps	**15**
A10V(S)O (Series 52) - Variable Displacement Pumps	**18**
A10VSO (Series 32) - Variable Displacement Pumps	**20**
A10FZO, A10FZG (Series 10) - Variable Displacement Pumps	**22**
(A)A4VSO (Series 10 & 30)	**22**
A15V(S,L)O (Series 10) - Variable Displacement Pumps	**25**
AA4VG (Series 32) - Variable Displacement Pumps	**26**
AA10VG (Series 10) - Variable Displacement Pumps	**28**
AZPF and AZPN - External Gearm Pumps	**29**
AZPG - External Gear Pumps	**31**
AZPB - External Gear Pumps	**32**
VPV - Variable vane pumps, pilot operated	**34**
PVV - Fixed Displacement Vane Pumps	**36**
PGH - Internal Gear Pumps	**37**
Motors	
(A)A6VM - Variable Displacement Motors	**38**
A10VM - Variable Displacement Motors	**40**
(A)A2FM - Fixed Displacement Motors	**41**
A10FM (A)A2FM - Fixed Displacement Motors	**43**
AZMF - External Gear Motors	**44**
Check Valves	
SV & SL - Check Valves	**46**
Z1S - Check Valves	**47**
Z2S - Piloted-to-Open Check Valves	**48**
ZSF - Filling Valves	**49**
SFA - Prefill Valves	**50**

Directional Valves	
SED & SEW - Directional Poppet Valves	**51**
4WMM & 4WMR - Directional Spool Valves	**52**
WE - Directional Spool Valves	**53**
4WEH - Directional Spool Valves	**55**
WP & WN - Directional Valves w/ Fluid Actuation	**57**
Z4WEH - Directional Shut-off Valves	**58**
LC + LFA - Logic valves for direction functions	**59**
LC + LFA - Logic valves for pressure functions	**60**
5-WE - Directional Spool Valves	**61**
3WRCBH - Directional High-Response Cartridge Valves	**62**
Pressure Control Valves	
DBD - Pressure Relief Valves	**63**
ZDB & Z2DB - Pressure Relief Valves	**64**
DBW - Pressure Relief Valves	**65**
ZDR - Pressure-Reducing Valves	**66**
Flow Control Valves	
Z2FS - Double Throttle Check Valves	**67**
2FRM - 2-Way Flow Control Valves	**68**
Proportional Valves	
4WRA & 4WRAE - Proportional Directional Valves	**69**
4WRA(E)B - Proportional Directional Valves	**70**
4WREE - Proportional Directional Valves	**71**
4WRZE - Proportional Directional Valves	**73**
4WRP & 4WRPE (Series 2X) - Proportional Directional Valves	**74**
4WRPE (Series 3X) - High-Response Directional Valves	**75**
4WRPH & 4WRPEH (Series 2X) - High-Response Directional Valves	**76**
4WRPEH (Series 3X) - High-Response Directional Valves	**77**
4WRLE (Series 4X) - High-Response Directional Valves	**78**

5WRPE - High-Response Directional Valves	**79**
STW - Proportional Directional Valves	**80**
2WFCE - Proportional Flow Control Valves	**81**
DBE6X - Proportional Pressure Relief Valves	**82**
DBEE6 - Proportional Pressure Relief Valves	**83**
DBETX - Proportional Pressure Relief Valves	**84**
DBETA - Proportional Pressure Relief Valves	**85**
DBETBEX - Proportional Pressure Relief Valves	**86**
DBET & DBETE - Proportional Pressure Relief Valves	**87**
DBETR - Proportional Pressure Relief Valves	**88**
DBEME - Proportional Pressure Relief Valves	**89**
DBEP - Proportional Pressure Relief Valves	**90**
DRE6X - Proportional Pressure Reducing Valves	**91**
DREBE6X - Proportional Pressure Reducing Valves	**92**
DRE(M) & DRE(M)E - Proportional Pressure Reducing Valves	**93**
3DREP(E) - Proportional Pressure Reducing Valves	**94**
4WS2EM - Directional Servo Valves	**95**
SYDFEE - Pressure & Flow Control System	**96**
SYHDFEE - Pressure & Flow Control System	**97**
Standard Manifolds	
Automotive Bar Manifolds	**98**
Parallel Bar Manifolds	**99**
Subplates	**102**
Cover Plates	**103**
Sandwich Plates	**104**
Adapter Plates	**105**
Relief Valve Blocks	**106**
Proportional Electronics	
VT-MACAS - Analog Positioning Module	**107**

VT-MRPA1-100 - Analog Amplifier	**108**
VT-MRPA2-1 - Analog Amplifier	**109**
VT3002 - Card Holder	**110**
VT-DFP - Pilot Control Valves	**111**
VT-VRRA - Analog Amplifier	**112**
VT-VARAP1 - p/Q Amplifier	**113**
VT-HACD-3 - Control Electronics	**114**
VT-5041-3X - Analog Amplifier	**115**
VT-VRPA1-100 - Analog Amplifier	**116**
VT-SSPA1-508 - Plug-in Amplifier	**117**
VT-VACAP1 - p/Q Controller	**118**
HM20 - Pressure Transducer for Hydraulic Applications	**119**
Mobile Electronics	
BODAS RC Controller	**120**
BODAS Tools	**122**
BODAS Sensors & Connectors	**123**
Display DI4	**124**
Color Video Camera	**125**
Analog Amplifier - RA	**126**
BODAS Connectors & Wire Kits	**127**
Discontinued - BODAS Node Kits	**129**
Mobile Controls	
Single-axis hydraulic pilot controllers - 2TH6	**131**
Hydraulic pilot controller - 2TH7	**132**
Hydraulic pilot control for armrest installation- 4TH6	**133**
Compact Hydraulics	
Relief, direct acting poppet type	**134**
Relief, direct acting poppet type, differential area	**135**
Relief, pilot operated spool type	**136**

Relief, pilot operated spool type with external drain	**137**
Relief, bi-directional direct acting poppet type, differential area	**138**
Relief, pilot operated poppet type	**139**
Pressure Reducing, pilot operated spool type	**140**
Pressure Reducing and Relieving, direct acting spool type	**141**
Pressure Reducing and Relieving, pilot operated spool type	**142**
Check, poppet type	**143**
Reverse Check, poppet type	**145**
Pilot-to-Open Check	**146**
Dual Pilot-to-Open Check	**147**
Shuttle, direct acting poppet type	**148**
Pilot-to-Open Check	**149**
Pressure compensator with load sense	**150**
(EDCM/EDCMF-VM) - Anti-Cav Relief Module for EDC, B-side only	**151**
(EDCM/EDCMF-VR) - PO Check Module for EDC, A-side only	**152**
EDM-PO - Stacking Modules	**153**
EDM-CR - Stacking Modules	**154**
EDM-FC - Stacking modules	**155**
EDM-CB - Stacking modules	**156**
(EDCM-VM5) - Secondary Pressure Relief for EDC, A & B-sides	**157**
(EDCMF-...) - Flangeable elements w/ different ports for EDC	**158**
Counterbalance Valves - Common Cavity	**159**
Standard Poppet Type, differential area, counterclockwise adj.	**160**
Standard Guided Poppet Type, differential area, counterclockwise adj.	**161**
Relief Compensated Poppet Type, differential area, counterclockwise adj.	**162**
Vented Guided Poppet Type, counterclockwise adj.	**163**
4-Port Vented Poppet Type, external drain, counterclockwise adj.	**164**
Counterbalance Valves - Integrated Cavity	**165**
3-Way Pressure Compensated, fully adj.	**166**

Cartridge Restrictors	**167**
Needle Restrictors, free reverse flow	**168**
Needle Restrictors, fine adjustment	**169**
2-Way Pressure Compensated, fixed setting	**170**
Flow dividers and combiners	**171**
3-Way Pressure Compensated, fixed setting	**172**
2-Way, pilot operated poppet type, normally closed	**173**
2-Way, pilot operated poppet type, normally open	**174**
3/2 Solenoid Operated Valves, spool type	**175**
4/3 Solenoid Operated Valves, spool type	**176**
4/2 Solenoid Operated Valves, spool type	**177**
Proportional pressure relief, pilot operated	**178**
Proportional non-compensated flow regulator	**179**
Proportional non-compensated flow regulator, poppet type	**180**
Proportional pressure reducing, pilot operated	**181**
Proportional pressure reducing, direct acting	**182**
Proportional relief, direct acting	**183**
Proportional relief, pilot operated	**184**
Proportional flow control, with integrated pressure compensator	**185**
Line Bodies - Common Cavity	**186**
Line Bodies - Sun Cavity	**187**
Cartridge Accessories	**188**
3-Way, 2-Position, direct acting	**189**
6-Way, 2-Postion, direct acting	**190**
Inlet Plate, basic (TA-00)	**191**
Inlet Plate, relief (TA-04)	**192**
Inlet Plate, relief and dump (TA-05)	**193**
Inlet Plate, compensator (TA-06)	**194**
Inlet Plate, LS proportional flow control with unloading valve (TA-10)	**195**

4/3 Directional Valve Elements, with PO check valves - B8_45 (EDBY-VR)	**196**
4/3 Directional Valve Elements - B8_08 (EDBZ)	**197**
4/3 - 4/2 Directional Valve Elements - L8_10 (ED1) and L8_11 (ED2-DZ)	**198**
4/3 Proportional Valve Elements - L8_80 (ED4-P)	**200**
4/3 Lever Operated Directional Valve Elements - L8_L1 (ED-LV)	**202**
4/2, 4/3 LUDV Flow Sharing Directional Valve Elements - L8511 (EDC-DZ)	**203**
4/3, 4/2 LUDV Proportional Flow Sharing Valve Elements - L8580 (EDC-P)	**205**
4/3 Directional Valve Elements - D8_5 (EDD-XZ)	**207**
4/3 Directional Valve Elements, with PO Check Valves- B8_48 (EDBZ-VR)	**208**
4/3 Proportional Valve Elements - B8_80 (EDB-P)	**209**
4/3 LS Directional Valve Elements, with PO check valves - B8_45 (EDBY-VR)	**210**
4/3 Load Sensing Directional Valve Elements - B8_08 (EDBZ)	**211**
4/3 LS Directional Valve Elements, with PO check valves - B8_48 (EDBZ-VR)	**212**
4/3 Load Sensing Proportional Valve Elements - B8_80 (EDB-P)	**213**
4/3 - 4/2 Load Sensing Directional Valve Elements - L8_10 (ED1) and L8_11 (ED2-DZ	**214**
4/3 Load Sensing Proportional Valve Elements - L8_80 (ED4-P)	**216**
4/3 LS Lever Operated Directional Valve Elements - L8_L1 (ED-LV)	**218**
Exit Plates	**219**
Intermediate Plates	**220**
Bankable Accessories	**222**
Bankable and Diverter Coils	**224**
Power Packs / Motor Pumps	
Power Packs, fixed displacement - PP	**226**
Close-coupled motor pump groups - MPGB-AZP	**231**
Preassembled filter/cooler module - MFC3	**233**
GoPak™ Hydraulic Power Units	**236**
Accumulators	
ABZSS - Accumulator Safety Blocks	**237**

Accessories	
Subplates, Bolt Kits, and Electrical Connectors	**238**
Coils & Handnuts - Directional Valves	**239**
Aftermarket Parts	
Seal Kits	**241**
A10 Service Parts Kits	**244**
Rineer Service Kits	**247**

GoTo Focused Delivery Program: Pumps

A1VO - Variable Displacement Pumps (Series 10)

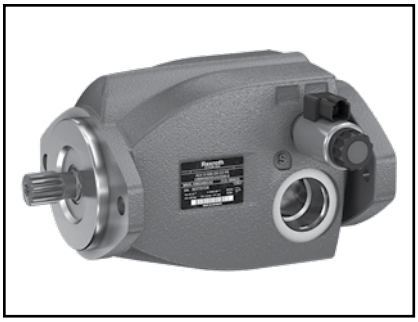

The A1VO is a variable displacement axial piston pump in swashplate design for load sensing hydraulic circuits in the smaller classes of mobile working machinery. This cost-saving alternative to the traditional constant pump facilitates a simple, economical switch to a load sensing system that reduces fuel consumption by thousands of gallons over its service life. Its compact size and adaptability make it suitable for a wide array of mobilemachines including tractors, forklifts and commercial vehicles.

For complete engineering and design information: ***GoTo www.boschrexroth-us.com/GoTopumps***

Features

- Significant fuel savings of up to 15% compared to fixed systems
- Optimized efficiency, though same power at less fuel consumption
- Compact design with controller and connections integrated into port plate
- High flexibility: Pumps can be combined using interchangeable through-drive adapter
- Maximum flow of 105 l/min thanks to high self-suction speeds
- Detailed information: RE92650

Technical Data

Size				35
Nominal pressure		p_N	bar (psi)	250 (3600)
Peak pressure		p_{max}	bar (psi)	280 (4000)
Displacement		$V_{g\ max}$	cm^3 (in^3)	35 (2.1)
Speed		n_{max}	rpm	3000
Flow	at n_{max}	$q_{V\ max}$	l/min (gpm)	105 (27.7)
Power	Δp = 250 bar (3600 PSI)	P_{max}	kW	44
Torque	Δp = 250 bar (3600 PSI)	T_{max}	Nm (lb-ft)	139 (102.5)
Weight (approx.)		m	kg (lbs)	18.4 (40.6)

Part Number	Description	Max. Quantity	Shipment (Business Days)
R902549741	A1VO035DRS0C200/10BLVB2S41000000-0	10	10 day(s)
R986901177	A1VO035DRS0C200/10BLVB2S41A2S200	10	10 day(s)
R986901181	A1VO035DRS0C200/10BLVB2S41A2S300	10	10 day(s)
R986901185	A1VO035DRS0C200/10BLVB2S41A2S400	10	10 day(s)
R986901189	A1VO035DRS0C200/10BLVB2S41B2S400	10	10 day(s)
R986901193	A1VO035DRS0C200/10BLVB2S41B2S500	10	10 day(s)
R902549738	A1VO035DRS0C200/10BLVB2S51000000-0	10	10 day(s)
R986901178	A1VO035DRS0C200/10BLVB2S51A2S200	10	10 day(s)
R986901182	A1VO035DRS0C200/10BLVB2S51A2S300	10	10 day(s)
R986901186	A1VO035DRS0C200/10BLVB2S51A2S400	10	10 day(s)
R986901190	A1VO035DRS0C200/10BLVB2S51B2S400	10	10 day(s)
R986901194	A1VO035DRS0C200/10BLVB2S51B2S500	10	10 day(s)
R902549736	A1VO035DRS0C200/10BRVB2S41000000-0	10	10 day(s)
R986901179	A1VO035DRS0C200/10BRVB2S41A2S200	10	10 day(s)
R986901183	A1VO035DRS0C200/10BRVB2S41A2S300	10	10 day(s)
R986901187	A1VO035DRS0C200/10BRVB2S41A2S400	10	10 day(s)
R986901191	A1VO035DRS0C200/10BRVB2S41B2S400	10	10 day(s)
R986901195	A1VO035DRS0C200/10BRVB2S41B2S500	10	10 day(s)
R902549737	A1VO035DRS0C200/10BRVB2S51000000-0	10	10 day(s)
R986901180	A1VO035DRS0C200/10BRVB2S51A2S200	10	10 day(s)
R902560883	A1VO035DRS0C200/10BRVB2S51A2S200-0	10	10 day(s)
R986901184	A1VO035DRS0C200/10BRVB2S51A2S300	10	10 day(s)
R986901188	A1VO035DRS0C200/10BRVB2S51A2S400	10	10 day(s)
R986901192	A1VO035DRS0C200/10BRVB2S51B2S400	10	10 day(s)
R986901196	A1VO035DRS0C200/10BRVB2S51B2S500	10	10 day(s)

GoTo Focused Delivery Program: Pumps

A10V(S)O & (A)A10VSO - Variable Displacement Pumps (Series 31)

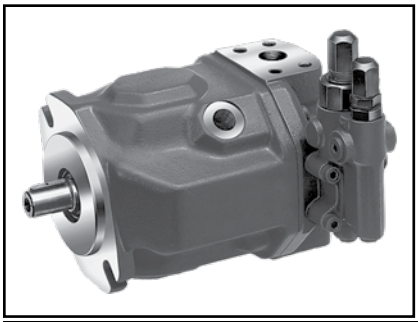

Variable displacement axial piston pump (A)A10V(S)O, Series 31 in swashplate design is available for open circuit applications. It can be used in both mobile and industrial applications. Flow is proportional to the drive speed and the displacement. By adjusting the position of the swashplate, it is possible to steplessly vary the flow. Multiple forms of pressure, flow or electrohydraulic controls are available.

For complete engineering and design information: ***GoTo www.boschrexroth-us.com/GoTopumps***

Features

- Sizes 10 to 140
- Axial piston swashplate design
- Open circuit
- Series 31 (sizes 18, 28, 45, 71, 100, 140), Series 52 (sizes 10, 28, 45, 60, 85)
- Combination of pumps of up to the same size can be mounted to the through-drive (not with size 10)
- - Pump version starting with special code 'E' available for use with water-content fluids
- Certain Parts benefit from Graduated Lead Time:
- Quantity 10 or less, Lead Time 10 days
- Quantity 11 to 30, Lead Time 30 days
- Quantity 31+, Lead Time 40 days
- Detailed information: RE-A92701, RE-A92711

Technical Data

Size				18	28	45	71	100	140
Nominal pressure		p_N	bar (psi)	280 (4000)	280 (4000)	280 (4000)	280 (4000)	280 (4000)	280 (4000)
Peak pressure		p_{max}	bar (psi)	350 (5100)	350 (5100)	350 (5100)	350 (5100)	350 (5100)	350 (5100)
Displacement		$V_{g\ max}$	cm^3 (in^3)	18 (1.10)	28 (1.71)	45 (2.75)	71 (4.33)	100 (6.10)	140 (8.54)
Speed [1]		n_{max}	rpm	3300	3000	2600	2200	2000	1800
Flow	at n_{max}	$q_{V\ max}$	l/min (gpm)	59 (15.59)	84 (22.19)	117 (31)	156 (41)	200 (53)	252 (67)
Power	Δp = 280 bar (4000 PSI)	P_{max}	kW	28	39	55	73	93	118
Torque	Δp = 280 bar (4000 PSI)	T_{max}	Nm (lb-ft)	80 (59)	125 (92)	200 (148)	316 (233)	445 (328)	623 (460)
Weight (approx.)		m	kg (lbs.)	12 (26)	15 (33)	21 (46)	33 (73)	45 (99)	60 (132)

1) The values are valid at an absolute pressure of 1 bar (14.50 PSI) in suction port S.

Part Number	Description	Max. Quantity	Shipment (Business Days)
R902549833	A A10V O 45 DFR /31L-VSC62N00	10	10 day(s)
R902506696	A A10V O 45 DFR /31L-VSC62N00 *GO2*	10	10 day(s)
R902506697	A A10V O 71 DFR /31R-VSC92K68 *GO2*	10	10 day(s)
R902542670	A A10VSO 28 DR /31R-PPA12N00	10	10 day(s)
R902546728	A A10VSO 28 DR /31R-VPA12N00	10	10 day(s)
R902504264	A A10VSO 45 DFR1/31R-VPA12N00	10	10 day(s)
R902506738	A A10VSO 45 DFR1/31R-VPA12N00 *GO2*	10	10 day(s)
R902506700	A AA10VSO100 DFR /31R-VKC62N00 *GO2*	10	10 day(s)
R902504304	A10V O 28 DFR /31L-VSC62N00	10	10 day(s)
R902502726	A10V O 28 DFR /31R-VSC62N00	10	10 day(s)
R902502735	A10V O 28 DFR1/31R-VSC62N00	10	10 day(s)
R902504295	A10V O 45 DFR /31L-VUC62N00	10	10 day(s)
R902502728	A10V O 45 DFR /31R-VSC62K01	10	10 day(s)
R902413359	A10V O 45 DFR /31R-VSC62K68	10	10 day(s)
R902502703	A10V O 45 DFR /31R-VSC62N00	10	10 day(s)
R902504296	A10V O 45 DRG /31L-VSC62N00	10	10 day(s)
R902502700	A10V O 71 DFR /31L-VSC91N00	10	10 day(s)
R902502710	A10V O 71 DFR /31L-VSC92N00	10	10 day(s)
R902502698	A10V O 71 DFR /31R-VSC92N00	10	10 day(s)
R902504299	A10V O 71 DFR1/31R-VSC94N00	10	10 day(s)
R902502711	A10V O 71 DR /31R-VSC92N00	10	10 day(s)
R902502723	A10V O 71 DRG /31R-VSC92K68	10	10 day(s)
R902504293	A10V O100 DFR /31L-VUC62N00	10	10 day(s)
R902504300	A10V O100 DFR /31R-VUC62K07	10	10 day(s)
R902504294	A10V O100 DFR /31R-VUC62N00	10	10 day(s)
R902503597	A10V O100 DFR1/31L-VUC61N00	10	10 day(s)
R902504328	A10VO140 DFR /31R-VSD62N00	10	10 day(s)
R902502736	A10VSO 18 DFR /31R-VKC62N00	10	10 day(s)
R902503236	A10VSO 18 DFR /31R-VSC62N00	10	10 day(s)
R902504298	A10VSO 18 DFR /31R-VUC62N00	10	10 day(s)
R902503994	A A10VSO 18 DFR /31R-VKC62K01	10	10 day(s)
R910945178	A10VSO 18 DFR1/31R-PPA12N00	10	10 day(s)
R902502702	A10VSO 18 DR /31R-VKC62N00	10	10 day(s)
R902562900	A A10VSO 18 DR /31R-VKC62K01	10	10 day(s)
R902502752	A10VSO 18 DRG /31R-VKC62N00	10	10 day(s)
R902506742	A A10VSO 18 DRG /31R-VKC62K01	10	10 day(s)
R910962757	A A10VSO 18 DRG /31R-VSC62N00	10	10 day(s)
R902502988	A10VSO 71 DR /31R-VPA42N00	10	10 day(s)
R902502996	A10VSO100 DFR1/31R-VPA12N00	10	10 day(s)
R902503000	A10VSO140 DFR1/31R-VPB12N00	10	10 day(s)
R902502185	AA10VSO 28 DFR /31R-VKC62K01	10	10 day(s)
R902502732	AA10VSO 28 DFR /31R-VKC62N00	10	10 day(s)
R902544727	AA10VSO 28 DR /31R-VKC62N00	10	10 day(s)
R902502734	AA10VSO 28 DRG /31R-VKC62N00	10	10 day(s)
R902505771	A A10V O 28 DRG /31R-VSC62N00	10	10 day(s)
R902502188	AA10VSO 45 DFR /31R-VKC62K01	10	10 day(s)
R902521476	AA10VSO 45 DFR /31R-VKC62K68	10	10 day(s)
R902502733	AA10VSO 45 DFR /31R-VKC62N00	10	10 day(s)
R902504391	AA10VSO 45 DFR /31R-VSC62N00	10	10 day(s)
R902502741	AA10VSO 45 DR /31R-VKC62N00	10	10 day(s)
R902502737	AA10VSO 45 DRG /31R-VKC62N00	10	10 day(s)
R902408358	A AA10VSO 45 DRG /31R-VKC62K01	10	10 day(s)

R902502186	AA10VSO 71 DFR /31R-VKC92K01	10	10 day(s)
R902400497	AA10VSO 71 DFR /31R-VKC92N00	10	10 day(s)
R902506142	A AA10VSO 71 DFR /31R-VKC92K52	10	10 day(s)
R902502127	AA10VSO 71 DFR1/31R-VKC92N00	10	10 day(s)
R902502981	AA10VSO 71 DR /31L-VKC92N00	10	10 day(s)
R902502980	AA10VSO 71 DR /31R-VKC92K01	10	10 day(s)
R902502701	AA10VSO 71 DR /31R-VKC92N00	10	10 day(s)
R902502985	AA10VSO 71 DRG /31R-VKC92N00	10	10 day(s)
R902502730	AA10VSO100 DFR /31R-VKC62N00	10	10 day(s)
R902502992	AA10VSO100 DR /31R-VKC62K01	10	10 day(s)
R902502997	AA10VSO100 DR /31R-VKC62N00	10	10 day(s)
R902502990	AA10VSO100 DRG /31R-VKC62N00	10	10 day(s)
R902503002	AA10VSO140 DFR /31R-VKD62K01	10	10 day(s)
R910940042	AA10VSO140 DFR /31R-VKD62N00	10	10 day(s)
R902503001	AA10VSO140 DFR /31R-VKD62N00	10	10 day(s)
R902502998	AA10VSO140 DFR1/31R-VKD62K01	10	10 day(s)
R902502731	AA10VSO140 DR /31R-VKD62N00	10	10 day(s)
R902503004	AA10VSO140 DRG /31R-VKD62N00	10	10 day(s)
R902506599	AE A10VSO 18 DR /31R-PKC62N00 *GO2*	10	10 day(s)
R902506596	AEAA10VSO 28 DR /31R-PKC62N00 *GO2*	10	10 day(s)
R902546863	AEAA10VSO 45 DR /31R-PKC62N00	10	10 day(s)
R902506597	AEAA10VSO100 DR /31R-PKC62N00 *GO2*	10	10 day(s)
R902506598	AEAA10VSO140 DR /31R-PKD62N00 *GO2*	10	10 day(s)
R902502986	EAA10VSO 71 DR /31R-VKC92N00	10	10 day(s)

GoTo Focused Delivery Program: Pumps

A10V(S)O - Variable Displacement Pumps (Series 52)

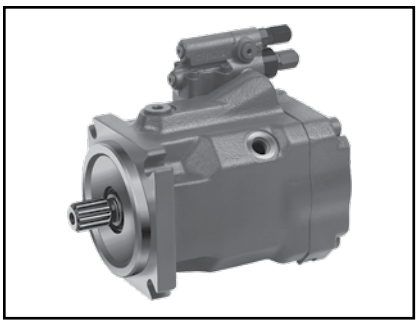

Variable displacement axial piston pump A10V(S)O, Series 52 in swashplate design is available for hydrostatic drives in an open circuit. The flow is proportional to the drive speed and displacement of the pump. Flow can be steplessly varied by adjusting the swashplate angle. Long service life, low noise, and a favorable power-to-weight ratio make it ideal for mobile and industrial applications requiring a compact drive.

For complete engineering and design information: ***GoTo www.boschrexroth-us.com/GoTopumps***

Features

- Sizes 10 to 85 cc
- Axial piston swashplate design
- Open circuit
- Series 52
- Combination of pumps of up to same size can be mounted to the thru-drive (not with size 10)
- Graduated Lead Time:
- - Quantity 10 or less, Lead Time 10 days
- - Quantity 11+, Lead Time 40 days
- Detailed information:
- RE-A92703

Technical Data

Size				18	28	45	60	85
Nominal pressure		p_N	bar (psi)	250 (3600)	250 (3600)	250 (3600)	250 (3600)	250 (3600)
Peak pressure		p_{max}	bar (psi)	315 (4600)	315 (4600)	315 (4600)	315 (4600)	315 (4600)
Displacement		$V_{g\ max}$	cm^3 (in^3)	10.5 (0.64)	28 (1.71)	45 (2.75)	60 (3.66)	85 (5.18)
Speed [1]		n_{max}	rpm	3600	3000	2600	2700	2500
Flow	at n_{max}	$q_{V\ max}$	l/min (gpm)	38 (10.04)	84 (22)	117 (31)	163 (43)	212 (55)
Power	Δp = 250 bar (3600 PSI)	P_{max}	kW	16	35	49	68	89
Torque	Δp = 250 bar (3600 PSI)	T_{max}	Nm (lb-ft)	42 (31)	111 (82)	179 (132)	238 (176)	338 (247)
Weight (approx.)		m	kg (lbs.)	8 (18)	14 (31)	18 (40)	22 (49)	34 (75)

1) The values are valid at an absolute pressure of 1 bar (14.50 PSI) in suction port S.

Part Number	Description	Max. Quantity	Shipment (Business Days)
R902534923	A A10V O 60 DFR /52L-PUC61N00	10	10 day(s)
R902506739	A A10V O 60 DFR /52L-VUC61N00 *GO2*	10	10 day(s)
R902504312	A10V O 28 DFR /52L-VSC64N00	10	10 day(s)
R902502740	A10V O 28 DFR /52R-VSC64N00	10	10 day(s)
R902504634	A10V O 28 DR /52L-VRC64N00	10	10 day(s)
R902504317	A10V O 28 DR /52L-VSC64N00	10	10 day(s)
R902504314	A10V O 28 DR /52R-VSC64N00	10	10 day(s)
R902502739	A10V O 45 DFR /52L-VSC64N00	10	10 day(s)
R902504305	A10V O 45 DFR /52L-VUC64N00	10	10 day(s)
R902504660	A10V O 45 DFR /52R-VSC62N00	10	10 day(s)
R902401405	A10V O 45 DFR /52R-VSC64N00	10	10 day(s)
R902504662	A10V O 45 DFR /52R-VUC62N00	10	10 day(s)
R902504309	A10V O 45 DFR /52R-VUC64N00	10	10 day(s)
R902504652	A10V O 45 DFR1 /52L-VSC64N00	10	10 day(s)
R902504653	A10V O 45 DFR1 /52L-VUC64N00	10	10 day(s)
R902502738	A10V O 45 DFR1/52R-VSC64N00	10	10 day(s)
R902504664	A10V O 45 DFR1/52R-VUC62N00	10	10 day(s)
R902504306	A10V O 45 DFR1/52R-VUC64N00	10	10 day(s)
R902505536	A10V O 45 DFR1/52R-VUC64N00	10	10 day(s)
R902504310	A10V O 45 DR /52R-VUC64N00	10	10 day(s)
R902504656	A10V O 45 DR /52L-VUC64N00	10	10 day(s)
R902504654	A10V O 45 DR/52L-VSC64N00	10	10 day(s)
R902504821	A10V O 60 DFR /52L-VSC62K68	10	10 day(s)
R902504690	A10V O 60 DFR /52L-VSC61N00	10	10 day(s)
R902504755	A10V O 60 DFR /52L-VUC62N00	10	10 day(s)
R902504320	A10V O 60 DFR /52R-VSD61N00	10	10 day(s)
R902504727	A10V O 60 DFR /52R-VSD62N00	10	10 day(s)
R902504697	A10V O 60 DFR /52R-VUC61N00	10	10 day(s)
R902504790	A10V O 60 DFR/52L-VSD62K04	10	10 day(s)
R902504813	A10V O 60 DFR/52L-VSD62K68	10	10 day(s)
R902504728	A10V O 60 DFR1/52L-VSD62N00	10	10 day(s)
R902549877	A A10V O 60 DFR1/52R-VSD61N00	10	10 day(s)
R902504319	A10V O 60 DFR1/52R-VUC61N00	10	10 day(s)
R902504753	A10V O 60 DFR1/52R-VUC62N00	10	10 day(s)
R902501461	A10V O 60 DRG /52R-VUC62N00 -SO 97	10	10 day(s)
R902504326	A10V O 85 DFR /52L-VUC62N00	10	10 day(s)
R902504834	A10V O 85 DFR /52R-VUC61N00	10	10 day(s)
R902504322	A10V O 85 DFR /52R-VUC62N00	10	10 day(s)
R902504826	A10V O 85 DFR1/52L-VUC62N00	10	10 day(s)
R902476345	A10VSO 10 DFR /52R-VKC64N00 E	5	10 day(s)

GoTo Focused Delivery Program: Pumps

A10VSO - Variable Displacement Pumps (Series 32)

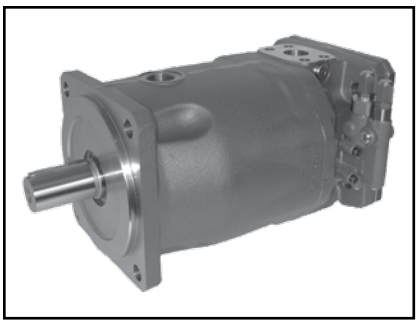

Variable displacement axial piston pump A10VSO, Series 32 in swashplate design is available for hydrostatic drives in an open circuit. The flow is proportional to the drive speed and displacement of the pump. It contains a port for pressure transducers in the pump outlet and is highly resistant to sudden drops and spikes in pressure, contributing to maximum efficiency. Generally used in industrial applications, the Series 32 has a low-noise design and features a Universal through-drive with coverplate.

For complete engineering and design information: ***GoTo www.boschrexroth-us.com/GoTopumps***

Features

- Sizes 71, 140, & 180 cc (A10VSO)
- Sizes 45 & 100 cc (A10VO)
- Axial piston swashplate design
- Open circuit
- Series 32
- Detailed information: RE-A92714 (A10VSO), RE92705 (A10VO)

Technical Data

Size (A10VSO)				71	140	180
Nominal pressure		p_N	bar (psi)	280 (4000)		
Peak pressure		p_{max}	bar (psi)	350 (5100)		
Displacement		$V_{g\ max}$	cm^3 (in^3)	71 (4.33)	140 (8.54)	180 (10.98)
Speed [1]		n_{max}	rpm	1800		
Flow	at n_{max}	$q_{V\ max}$	l/min (gpm)	128 (33.8)	252 (67)	324 (85.6)
Power	Δp = 280 bar (4000 PSI)	P_{max}	kW	59.7	118	151
Torque	Δp = 280 bar (4000 PSI)	T_{max}	Nm (lb-ft)	317 (234)	624 (454)	802 (589)
Weight (approx.)		m	kg (lbs.)	47 (104)	73 (161)	78 (171)

Size (A10VO)				45	100
Nominal pressure		p_N	bar (psi)	280 (4000)	
Peak pressure		p_{max}	bar (psi)	350 (5100)	
Displacement		$V_{g\ max}$	cm^3 (in^3)	45 (2.75)	100 (6.10)
Speed [1]		n_{max}	rpm	3000	2300
Flow	at n_{max}	$q_{V\ max}$	l/min (gpm)	135 (35.7)	230 (60.8)
Power	Δp = 280 bar (4000 PSI)	P_{max}	kW	83	107
Torque	Δp = 280 bar (4000 PSI)	T_{max}	Nm (lb-ft)	200 (148)	446 (329)
Weight (approx.)		m	kg (lbs.)	30 (66)	69 (152)

Part Number	Description	Max. Quantity	Shipment (Business Days)
R902553517	A10V O100LA6DG/32R-VSC72U00E	3	10 day(s)
R902553519	A10VO 45 LA7DG/32R-VSC72U00E	3	10 day(s)
R902551878	A10VSO 71 LA6DG/32R-VSD72U00E	3	10 day(s)
R902513544	A10VSO140 DRG /32R-VSD72U00E	3	10 day(s)
R902514124	A10VSO140 DRS /32R-VSD72U00E	3	10 day(s)
R902497939	A10VSO180 DRG /32R-VKD72U00E E	3	10 day(s)

GoTo Focused Delivery Program: Pumps

A10FZO, A10FZG - Variable Displacement Pumps (Series 10)

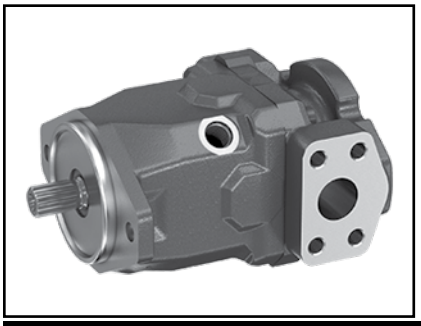

Developed for use in speed-controlled drives, the A10FZO is built to withstand frequent changing of direction and start/stop operation. Even at the lowest speed between 0 and 200 rpm, they provide a constant pressure and offer extremely high efficiency in pressure holding operation. The A10FZO units can be used as pumps in one- and two-quadrant operation.

For complete engineering and design information: ***GoTo www.boschrexroth-us.com/GoTopumps***

Features

- For use in single- and double-quadrant operation
- Suitable for start/stop-operation
- Suitable for long pressure retention operation
- Well-tried A10 rotary group technology
- Through drive possibility
- High total efficiency
- Swashplate design
- Detailed information: RE91485

Technical Data

Size				10	18	28	45	63
Displacement geometric, per revolution		V_g	cm^3 (in^3)	10.6 (0.65)	18 (1.10)	28 (1.71)	45 (2.75)	63 (3.84)
Nominal pressure		p_{nom}	bar (psi)	315 (4600)				
Maximum pressure		p_{max}	bar (psi)	350 (5100)				
Maximum speed		n_{nom}	rpm	3600	3300	3000		2600
Flow	at n_{nom}	q_V	l/min (gpm)	38.2 (10.1)	59.4 (15.7)	84 (22.2)	135 (35.7)	164 (43.3)
Power	at n_{nom} and p_{nom}	P	kW (HP)	20 (27)	31.2 (42)	44 (59)	71 (95)	86 (115)
Torque	at p_{nom}	M	Nm (lb-ft)	53 (39)	90.3 (66.5)	140.4 (103.5)	225.7 (166.5)	316 (233)
Weight (approx.)		m	kg (lbs.)	9 (20)	10 (22)	15.5 (34)	21 (46)	26 (57)

Part Number	Description	Max. Quantity	Shipment (Business Days)
R902518486	A10FZO010/10R-VSC02N00	3	10 day(s)
R902544056	A A10FZO018/10R-VRC02N00	3	10 day(s)
R902534669	A A10FZO028/10R-VRC02N00	3	10 day(s)
R902548015	A A10FZO045/10R-VRC02N00	3	10 day(s)
R902550737	A A10FZO063/10R-VRC02N00	3	10 day(s)
R902534818	A A10FZG028/10W-VRC02N00	3	10 day(s)
R902544389	A A10FZG010/10W-VSC02N00	3	10 day(s)

(A)A4VSO - Variable Displacement Pumps (Series 10 & 30)

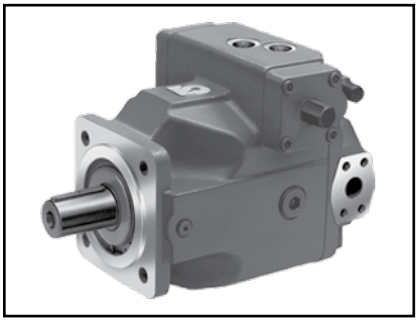

Variable displacement axial piston pump (A)A4VSO in swashplate design is available for open circuit applications. Sizes 40 & 71 are available in Series 10; sizes 125-250 are available in Series 30 and have the U99 Universal through-drive with coverplate. The flow is proportional to the input drive speed and displacement. By adjusting the swashplate angle, it is possible to infinitely vary the output flow. This rugged, low-noise pump is generally used in industrial 24/7 applications.

For complete engineering and design information: ***GoTo www.boschrexroth-us.com/GoTopumps***

Features

- Sizes 40 to 250 cc
- Series 10 & 30
- Open circuit
- HFC Seal Versions
- Special "F" variant available for water-content fluids - bearing flushing required
- Special "F2" variant available for water-content fluids - operation without bearing flushing (size 250 only)
- Detailed information: RA92050, RE-A92053 (HFC Fluids)

Technical Data

Size				40	71
Nominal pressure		p_N	bar (psi)	350 (5100)	350 (5100)
Peak pressure		p_{max}	bar (psi)	400 (5800)	400 (5800)
Displacement		$V_{g\ max}$	cm^3 (in^3)	40 (2.44)	71 (4.33)
Speed [1]		n_{max}	rpm	2600	2200
Flow	at n_{max}	$q_{V\ max}$	l/min (gpm)	104 (27.5)	156 (41.2)
Power	Δp = 350 bar (5100 PSI)	P_{max}	kW	61	91
Torque	Δp = 350 bar (5100 PSI)	T_{max}	Nm (lb-ft)	223 (165)	395 (292)
Weight (approx.)		m	kg (lbs.)	39 (86)	53 (117)

Size				125	180	250
Nominal pressure		p_N	bar (psi)	350 (5100)	350 (5100)	350 (5100)
Peak pressure		p_{max}	bar (psi)	400 (5800)	400 (5800)	400 (5800)
Displacement		$V_{g\ max}$	cm^3 (in^3)	125 (7.63)	180 (11.0)	250 (15.26)
Speed [1]		n_{max}	rpm	1800	1800	1500
Flow	at n_{max}	$q_{V\ max}$	l/min (gpm)	225 (59.4)	324 (85.6)	375 (99)
Power	Δp = 350 bar (5100 PSI)	P_{max}	kW	131	189	219
Torque	Δp = 350 bar (5100 PSI)	T_{max}	Nm (lb-ft)	696 (516)	1002 (744)	1391 (1032)
Weight (approx.)		m	kg (lbs.)	1391 (1032)	102 (225)	184 (406)

Part Number	Description	Max. Quantity	Shipment (Business Days)
R902406306	A AA4VSO 40 DR /10R-PKD63N00 E	3	10 day(s)
R902406401	A AA4VSO 71 DR /10R-PKD63N00 E	3	10 day(s)
R902446067	A AA4VSO 125 DR /30R-FKD75U99 E	3	10 day(s)
R902451164	A AA4VSO 125 DR /30R-VKD75U99 E	3	10 day(s)
R902446069	A AA4VSO 180 DR /30R-FKD75U99 E	3	10 day(s)
R902446024	A AA4VSO 180 DR /30R-VKD75U99 E	3	10 day(s)
R902445974	A AA4VSO 250 DR /30R-FKD75U99 E	3	10 day(s)
R902445975	AHAA4VSO 250 DR /30R-VKD75U99 E	3	10 day(s)
R902480613	AHAA4VSO 250 DRG /30R-VKD75U99 E	3	10 day(s)

GoTo Focused Delivery Program: Pumps

A15V(S,L)O - Variable Displacement Pumps (Series 10)

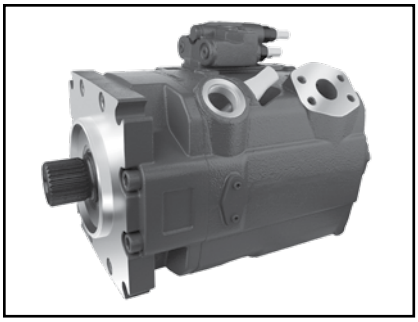

Variable displacement axial piston pump A15V(S,L)O, Series 10 in swashplate design is for hydrostatic drives in an open circuit. The pump is typically used in stationary applications where efficiency and compact design are required. It can work either as self-priming or with a charge pump. Other notable features include low noise operation, fast control response, overcenter operation and Universal through-drive with coverplate. The A15V(S,L)O is competitively priced compared to other industrial high-pressure designs.

For complete engineering and design information: ***GoTo www.boschrexroth-us.com/GoTopumps***

Features

- Sizes 145 to 280 cc
- Axial piston swashplate design
- Open circuit
- Series 10
- Typical used for stationary applications
- Detailed information: RA92800

Technical Data

Size				110	145	175	210	280
Nominal pressure		p_N	bar (psi)	350 (5100)	350 (5100)	350 (5100)	350 (5100)	350 (5100)
Peak pressure		p_{max}	bar (psi)	420 (6090)	420 (6090)	420 (6090)	420 (6090)	420 (6090)
Displacement		$V_{g\ max}$	cm^3 (in^3)	110 (6.71)	145 (8.8)	175 (10.7)	210 (12.8)	280 (17.1)
Speed [1]		n_{max}	rpm	2400	2300	2150	2100	1800 [1]
Flow	at n_{max}	$q_{V\ max}$	l/min (gpm)	264 (70)	334 (88.2)	376 (99.3)	441 (116.5)	504 (133.1)
Power	$\Delta p = 350$ bar (5100 PSI)	P_{max}	kW	154	195	219	257	294
Torque	$\Delta p = 350$ bar (5100 PSI)	T_{max}	Nm (lb-ft)	613 (452)	808 (596)	975 (719)	1170 (863)	1560 (1151)
Weight (approx.)		m	kg (lbs.)	64 (141)	79 (174)	97 (214)	111 (245)	143 (315)

For A15VLO versions (size 280 cc)
1) Max. speed = 2300 rpm

Part Number	Description	Max. Quantity	Shipment (Business Days)
R902557551	A15VSO145LRDRS0A0V/11ARVD4T1PU0000 E	3	10 day(s)
R902562181	A15VSO280LRDRS0A0V/11ARVE4T3PU0000 E	3	10 day(s)

GoTo Focused Delivery Program: Pumps

AA4VG - Variable Displacement Pumps (Series 32)

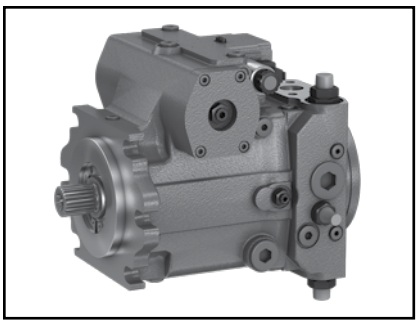

Variable displacement axial piston pump AA4VG, Series 32 in swashplate design is for hydrostatic closed circuit transmissions. The flow is proportional to drive speed and displacement which is infinitely variable depending on the swashplate angle. The pump is equipped with two pressure relief valves on the high pressure ports to protect the transmission from overload.

For complete engineering and design information: ***GoTo www.boschrexroth-us.com/GoTopumps***

Features

- Sizes 56 to 125 cc
- Axial piston swashplate design
- Closed circuit
- Series 32
- Integrated boost pump acts as feed and oil control pump
- Graduated Lead Time as follows:
- Quantity 10 or less, Lead Time 10 days
- Quantity 11+, Lead Time 40 days
- Detailed information: RE-A92003

Technical Data

Size				56	71	90	125
Nominal pressure		p_N	bar (psi)	400 (5800)	400 (5800)	400 (5800)	400 (5800)
Peak pressure		p_{max}	bar (psi)	450 (6500)	450 (6500)	450 (6500)	450 (6500)
Displacement		$V_{g\ max}$	cm^3 (in^3)	56 (3.42)	71 (4.33)	90 (5.49)	125 (7.63)
Speed [1]		n_{max}	rpm	3600	3300	3050	2850
Flow	at n_{max}	$q_{V\ max}$	l/min (gpm)	202 (53.4)	234 (61.8)	275 (72.5)	356 (94.1)
Power	$\Delta p = 400$ bar (5800 PSI)	P_{max}	kW	134	156	183	237
Torque	$\Delta p = 400$ bar (5800 PSI)	T_{max}	Nm (lb-ft)	356 (263)	451 (333)	572 (422)	795 (587)
Weight (approx.)		m	kg (lbs.)	38 (84)	50 (110)	60 (145)	80 (176)

Part Number	Description	Max. Quantity	Shipment (Business Days)
R902232831	AA4VG125EP4D1/32L-NSF52F001DP	10	10 day(s)
R902232830	AA4VG125EP4D1/32R-NSF52F001DP	10	10 day(s)
R902232833	AA4VG125HD3D1/32L-NSF52F001D	10	10 day(s)
R902232832	AA4VG125HD3D1/32R-NSF52F001D	10	10 day(s)
R902232806	AA4VG56EP3D1/32L-NSC52F005DP	10	10 day(s)
R902232804	AA4VG56EP3D1/32R-NSC52F005DP	10	10 day(s)
R902232808	AA4VG56EP3D1/32R-NSC52F025DP-S	10	10 day(s)
R902232809	AA4VG56EP4D1/32R-NSC52F025DP-S	10	10 day(s)
R902232810	AA4VG56HD3D1/32R-NSC52F005D	10	10 day(s)
R902232812	AA4VG56HD3D1/32R-NSC52F025D-S	10	10 day(s)
R902232813	AA4VG71EP3D1/32R-NSF52F001DP	10	10 day(s)
R902232817	AA4VG71EP4D1/32L-NSF52F001DP	10	10 day(s)
R902232816	AA4VG71EP4D1/32R-NSF52F001DP	10	10 day(s)
R902232818	AA4VG71EP4D1/32R-NSF52F011DP-S	10	10 day(s)
R902232820	AA4VG71HD3D1/32L-NSF52F001D	10	10 day(s)
R902232821	AA4VG71HD3D1/32R-NSF52F011D-S	10	10 day(s)
R902232822	AA4VG90EP3D1/32R-NSF52F001DP	10	10 day(s)
R902232825	AA4VG90EP4D1/32L-NSF52F001DP	10	10 day(s)
R902232827	AA4VG90HD3D1/32L-NSF52F001D	10	10 day(s)

GoTo Focused Delivery Program: Pumps

AA10VG - Variable Displacement Pumps (Series 10)

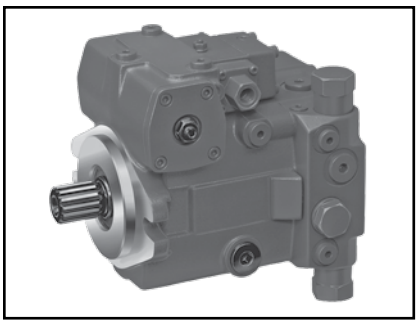

Variable displacement axial piston pump AA10VG, Series 10 in swashplate design is available for hydrostatic closed circuit transmissions. The flow is proportional to the drive speed and displacement and is infinitely variable depending on the swashplate angle. The pump is equipped with two pressure relief valves on the high pressure ports to protect the transmission from overload.

For complete engineering and design information: ***GoTo www.boschrexroth-us.com/GoTopumps***

Features

- Sizes 18 to 45 cc
- Axial piston swashplate design
- Closed circuit
- Series 10
- Pressure relief valves also function as boost valves
- Graduated Lead Time as follows:
- Quantity 10 or less, Lead Time 10 days
- Quantity 11+, Lead Time 40 days
- Detailed information: RA92750

Technical Data

Size				18	28	45
Nominal pressure		p_N	bar (psi)	300 (4350)	300 (4350)	300 (4350)
Peak pressure		p_{max}	bar (psi)	350 (5100)	350 (5100)	350 (5100)
Displacement		$V_{g\ max}$	cm^3 (in^3)	18 (1.10)	28 (1.71)	46 (2.81)
Speed [1]		n_{max}	rpm	4000	3900	3300
Flow	at n_{max}	$q_{V\ max}$	l/min (gpm)	72 (19)	109 (28.8)	152 (40.2)
Power	Δp = 300 bar (4350 PSI)	P_{max}	kW	36	54.6	75.9
Torque	Δp = 300 bar (4350 PSI)	T_{max}	Nm (lb-ft)	86 (63.5)	134 (99)	220 (162)
Weight (approx.)		m	kg (lbs.)	14 (31)	25 (55)	27 (60)

Part Number	Description	Max. Quantity	Shipment (Business Days)
R902232791	AA10VG18EP31/10R-NSC66F025SP-S	10	10 day(s)
R902232797	AA10VG28EP3D1/10R-NSC60F015DP-S	10	10 day(s)
R902232801	AA10VG45EP3D1/10L-NSC60F045DP-S	10	10 day(s)
R902232800	AA10VG45EP3D1/10R-NSC60F045DP-S	10	10 day(s)

GoTo Focused Delivery Program: Pumps

AZPF and AZPN - External Gear Pumps

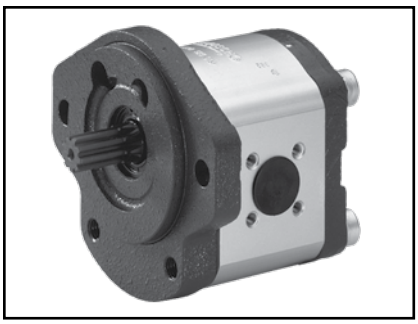

Bosch Rexroth has been involved with the design, development and manufacture of gear pumps for many decades. Well-proven designs, the use of specially developed materials, constant testing and sophisticated mass production techniques ensure products of the very highest quality.

For complete engineering and design information: ***GoTo www.boschrexroth-us.com/GoTopumps***

Features

- AZPF - sizes 4 to 28 cc; AZPN - sizes 20 to 36 cc
- Plain bearings for high loads
- Drive shafts according to ISO or SAE and customer-specific standards
- Combination of several pumps possible
- Line connections: connecting flanges or female threads
- Detailed information: RA10089 - AZPF, RA10097 - AZPN

Technical Data

AZPF – Size			4	5	8	11	14	16	19	22	25	28
Displacement	$V_{g\ max}$	cm^3 (in^3)	4.1 (0.26)	5.6 (0.35)	8.2 (0.51)	11.3 (0.71)	14.3 (0.89)	16.5 (1.03)	19.5 (1.22)	22.9 (1.43)	25.4 (1.59)	28.5 (1.78)
Operating pressure, continuous	$p_{1\ max}$	bar (psi)	250 (3600)	250 (3600)	250 (3600)	250 (3600)	250 (3600)	250 (3600)	210 (3045	180 (2610)	200 (2900)	170 (2500)
Operating pressure, intermittent	p_3	bar (psi)	280 (4100)	280 (4100)	280 (4100)	280 (4100)	280 (4100)	280 (4100)	230 (3335)	210 (3045)	220 (3200)	190 (2800)
Max. speed at p_1	n	rpm	3500	3500	3500	3000	2500	2500	2500	2000	2000	2000
Min. speed at p_1	n	rpm	600	500	500	500	500	500	500	500	500	500

Note:
– Applicable to an oil viscosity of 25 mm^2/s (116 SUS)and an oil temperature of 55 °C (131 °F) with HLP 46.
– The pressure in the suction port is 0.7 bar (10.2 PSI) min and 3 bar (43.5 PSI) max absolute.

AZPN – Size			20	22	25	28	32	36
Displacement		cm^3/rev (in^3/rev)	20.4 (1.24)	23.1 (1.41)	25.8 (1.57)	28.4 (1.73)	32.4 (1.98)	36.4 (2.22)
Inlet pressure		bar (psi)	min. 0.7; max. 3 (min. 10.2; max 43.5) [absolute]					
Max. continuous pressure	p_1	bar (psi)	230 (3335)	230 (3335)	230 (3335)	210 (3045)	180 (2610)	160 (2610)
Max. intermittent pressure	p_2	bar (psi)	250 (3625)	250 (3625)	250 (3625)	230 (3335)	200 (2900)	180 (2610)
Max. peak pressure	p_3	bar (psi)	270 (3915)	270 (3915)	270 (3915)	250 (3625)	220 (3190)	200 (2900)
Min. rotational speed ≤ 100		rpm	500	500	500	500	500	500
Max. rotational speed	p_1	rpm	2500	2500	2500	2300	2300	2100
	p_2	rpm	3000	3000	3000	2800	2800	2600

Part Number	Description	Max. Quantity	Shipment (Business Days)
9510290039	AZ-P-F-12-011-LRR12MB	3	10 day(s)
9510290040	AZ-P-F-12-014-LRR12MB	3	10 day(s)
9510390007	AZ-P-N-12-020-LDC12MB	3	10 day(s)
9510390139	AZ-P-N-12-036-RXR12MA-S0075	3	10 day(s)
0510225011	AZPF-10-004RQR12MB	3	10 day(s)
0510325006	AZPF-11-005RCB20MB	3	10 day(s)
0510325011	AZPF-11-005RQR12MB	3	10 day(s)
0510425009	AZPF-11-008RCB20MB	3	10 day(s)
0510425016	AZPF-11-008RQR12MB	3	10 day(s)
0510525009	AZPF-11-011RCB20MB	3	10 day(s)
0510225006	AZPF-12-004RCB20KB	3	10 day(s)
9510290021	AZPF-12-004RQR12MB	3	10 day(s)
9510290015	AZPF-12-004RRR12MB	3	10 day(s)
9510290037	AZPF-12-005LRR12MB	3	10 day(s)
9510290022	AZPF-12-005RQR12MB	3	10 day(s)
9510290005	AZPF-12-005RRR12MB	3	10 day(s)
9510290038	AZPF-12-008LRR12MB	3	10 day(s)
9510290023	AZPF-12-008RQR12MB	3	10 day(s)
9510290017	AZPF-12-008RRR12MB	3	10 day(s)
9510290024	AZPF-12-011-RQR12MB	3	10 day(s)
9510290414	AZPF-12-011-RRR12MB	3	10 day(s)
9510290025	AZPF-12-014-RQR12MB	3	10 day(s)
9510290004	AZPF-12-014-RRR12MB	3	10 day(s)
9510290122	AZPF-12-016RQR12MB	3	10 day(s)
9510290026	AZPF-12-016RQR12MB-S0040 - OK	3	10 day(s)
9510290056	AZPF-12-016RRR12MB	3	10 day(s)
9510290128	AZPF-12-019LRR12MB	3	10 day(s)
9510290042	AZPF-12-019LRR12MB-S0040	3	10 day(s)
9510290123	AZPF-12-019RQR12MB	3	10 day(s)
9510290027	AZPF-12-019RQR12MB-S0040	3	10 day(s)
9510290125	AZPF-12-019RRR12MB	3	10 day(s)
9510290124	AZPF-12-022RQR12MB	3	10 day(s)
9510290028	AZPF-12-022RQR12MB-S0040	3	10 day(s)
9510290126	AZPF-12-022RRR12MB	3	10 day(s)
9510290112	AZPF-22-025RQR12MB-S0040	3	10 day(s)
9510290111	AZPF-22-025RRR12MB	3	10 day(s)
9510290120	AZPF-22-028LRR12MB	3	10 day(s)
9510290115	AZPF-22-028RQR12MB-S0040	3	10 day(s)
9510290114	AZPF-22-028RRR12MB	3	10 day(s)
9510390001	AZPN-12-020-RDC12MB	3	10 day(s)
9510390002	AZPN-12-022-RDC12MB	3	10 day(s)
9510390135	AZPN-12-022RXR12MA-S0075	3	10 day(s)
9510390009	AZPN-12-025LDC12MB-S0040	3	10 day(s)
9510390003	AZPN-12-025RDC12MB-S0040	3	10 day(s)
9510390004	AZPN-12-028RDC12MB-S0040	3	10 day(s)
9510390011	AZPN-12-032LDC12MB-S0040	3	10 day(s)
9510390005	AZPN-12-032RDC12MB-S0040	3	10 day(s)
9510390053	AZPN-12-032RQC12MB-S0040	3	10 day(s)
9510390054	AZPN-12-036-RQC12MB	3	10 day(s)
9510390006	AZPN-12-036RDC12MB-S0040	3	10 day(s)
9510390052	AZPN12-028-RQC12MB-S0040	3	10 day(s)

GoTo Focused Delivery Program: Pumps

AZPG - External Gear Pumps

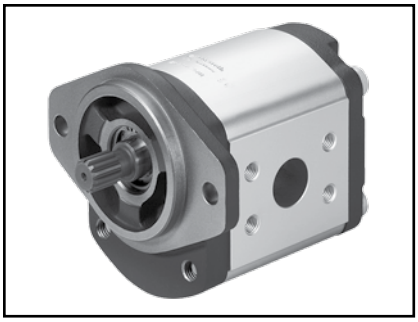

Bosch Rexroth has been involved with the design, development and manufacture of gear pumps for many decades. Well-proven designs, the use of specially developed materials, constant testing and sophisticated mass production techniques ensure products of the very highest quality.

For complete engineering and design information: ***GoTo www.boschrexroth-us.com/GoTopumps***

Features

- Sizes 32cc to 63cc
- Aluminum body design with cast iron end covers
- Drive shaft according to ISO or SAE and customer specific standards
- Combination pumps are possible
- Port connections, threaded or flanged
- Plain bearings for high loads
- Detailed information: RA10097

Technical Data

Nominal size		32	36	40	45	50	56	63
Displacement	cm^3 (in^3)	32 (1.95)	36 (2.20)	40 (2.44)	45 (2.75)	50 (3.05)	56 (3.42)	63 (3.84)
Speed Range	min	500						
	max	2800			2600		2300	
Rated Pressure	bar (psi)	250 (3625)				220 (3190)	195 (2830)	170 (2465)
Weight	kg (lbs)	9.8 (21.6)	10 (22.0)	10.2 (22.5)	10.4 (22.9)	10.6 (10.6)	10.8 (23.8)	11.2 (24.7)
Fluid Temperature Range	NBR (buna)	max 80°C (176°F)						
	FKM (viton)	max 110°C (230°F)						
Inlet Pressure (absolute)	bar (psia)	0.7 to 3 (10.2 to 43.5)						

Part Number	Description	Max. Quantity	Shipment (Business Days)
9510490084	AZPG-22-032RQC40MB	3	10 day(s)
9510490045	AZPG-22-036RDC40MB	3	10 day(s)
9510490085	AZPG-22-036RQC40MB	3	10 day(s)
9510490046	AZPG-22-040RDC40MB	3	10 day(s)
9510490086	AZPG-22-040RQC40MB	3	10 day(s)
9510490047	AZPG-22-045RDC40MB	3	10 day(s)
9510490087	AZPG-22-045RQC40MB	3	10 day(s)
9510490049	AZPG-22-056RDC40MB	3	10 day(s)
9510490089	AZPG-22-056RQC40MB	3	10 day(s)
9510490050	AZPG-22-063RDC40MB	3	10 day(s)

GoTo Focused Delivery Program: Pumps

AZPB - External Gear Pumps

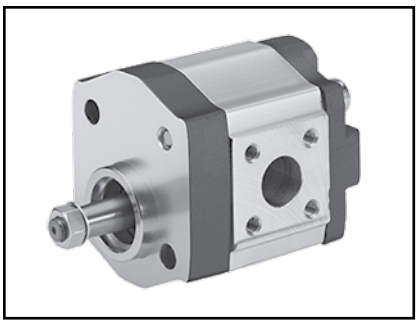

Bosch Rexroth has been involved with the design, development and manufacture of gear pumps for many decades. Well-proven designs, the use of specially developed materials, constant testing and sophisticated mass production techniques ensure products of the very highest quality.

For complete engineering and design information: ***GoTo www.boschrexroth-us.com/GoTopumps***

Features

- Sizes 1.0 cc to 7.1 cc
- Aluminum body design with cast iron end covers
- Drive shaft according to SAE and customer specific standards
- Combination pumps are possible|SAE threaded port connections
- Slide bearings for high loads

Technical Data

Nominal size		**1.0**	**2.0**	**3.1**	**4.0**	**5.0**	**6.3**	**7.1**
Displacement	cm^3 (in^3)	1.0 (0.06)	2.0 (0.12)	3.1 (0.19)	4.0 (0.24)	5.0 (0.31)	6.3 (0.38)	7.1 (0.43)
Speed Range	min	750						
	max	6000	5000	4000			3500	
Rated Pressure	bar (psi)	220 (3190)						
Fluid Temperature Range	NBR (buna)	max 80°C (176°F)						
	FKM (viton)	max 110°C (230°F)						
Inlet Pressure (absolute)	bar (psia)	0.7 to 3.0 (10.2 to 43.5)						

Part Number	Description	Max. Quantity	Shipment (Business Days)
R979107374	AZPB-32-1.0RQR12KB	3	10 day(s)
R979107383	AZPB-32-1.0RQR12KB-S0022	3	10 day(s)
R979107365	AZPB-32-1.0RRR12KB	3	10 day(s)
R979107375	AZPB-32-2.0RQR12KB	3	10 day(s)
R979107384	AZPB-32-2.0RQR12KB-S0022	3	10 day(s)
R979107366	AZPB-32-2.0RRR12KB	3	10 day(s)
R979107377	AZPB-32-3.1RQR12KB	3	10 day(s)
R979107386	AZPB-32-3.1RQR12KB-S0022	3	10 day(s)
R979107368	AZPB-32-3.1RRR12KB	3	10 day(s)
R979107378	AZPB-32-4.0RQR12KB	3	10 day(s)
R979107387	AZPB-32-4.0RQR12KB-S0022	3	10 day(s)
R979107369	AZPB-32-4.0RRR12KB	3	10 day(s)
R979107380	AZPB-32-5.0RQR12KB	3	10 day(s)
R979107389	AZPB-32-5.0RQR12KB-S0022	3	10 day(s)
R979107371	AZPB-32-5.0RRR12KB	3	10 day(s)
R979107381	AZPB-32-6.3RQR12KB	3	10 day(s)
R979107390	AZPB-32-6.3RQR12KB-S0022	3	10 day(s)
R979107372	AZPB-32-6.3RRR12KB	3	10 day(s)
R979107382	AZPB-32-7.1RQR12KB	3	10 day(s)
R979107391	AZPB-32-7.1RQR12KB-S0022	3	10 day(s)
R979107373	AZPB-32-7.1RRR12KB	3	10 day(s)

GoTo Focused Delivery Program: Pumps

VPV - Variable vane pumps, pilot operated

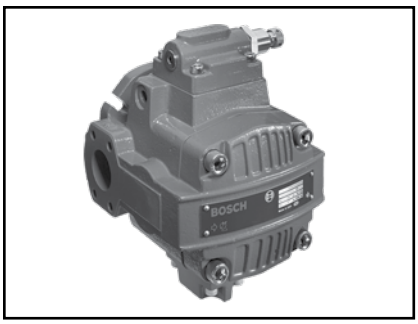

Rexroth continues to offer advanced variable vane pump technology. Market conditions favor hydraulic components that operate at low noise levels without sacrificing efficiency or durability. VPV pumps feature an outstanding response to the needs of the market today and for the future.

For complete engineering and design information: ***GoTo www.boschrexroth-us.com/gotopumps***

Features

- Sizes 16 to 164
- Flows from 30 to 287 L/min (7.6 to 75.8 GPM) in single pumps
- Available in combination with other VPV pumps and Rexroth gear pumps
- Through-drive horsepower transfer is 100% to the second pump
- VPV pumps are available with through-shaft versions for quick combinations
- Pressures to 210 bar (3050 PSI)
- Continuous speeds from 1000 to 1800 rpm
- A variety of fluids can be used: mineral oil, phosphate ester, and environmentally friendly fluids
- Controls include standard pressure compensation, remote pressure compensation, load sense, solenoid 2-pressure, and solenoid vented

Technical Data

Size cc/rev (in^3/rev)		16 (1.0)	25 (1.5)	32 (2.0)	45 (2.75)	63 (3.84)	80 (4.88)	100 (6.0)	130 (7.93)	164 (10.0)
Flow [1]	l/min (gpm)	30 (7.6)	43 (11.4)	57 (15.1)	79 (20.8)	110 (29.1)	140 (37.0)	172 (45.4)	227 (60.0)	287 (75.8)
Max. Pressure	bar (psi)	210 (3000)	210 (3000)	210 (3000)	210 (3000)	210 (3000)	210 (3000)	210 (3000)	210 (3000)	210 (3000)
Speed range		1000 to 1800 rpm								
Mounting		Flange to ISO 3019/1								
Mount Position		Any								
Rotation		RH								
Sound Pressure Level [2]		67	69	69	68	69	71	74	76	77

1) 1750 rpm in GPM.

2) dB(A) at 3000 PSI, 1750 rpm, full fl ow in a hemi-anechoic chamber with microphone placed 1 meter away at 7 discrete locations. Sound pressure levels are spacially and time weighted averaged.

Part Number	Description	Max. Quantity	Shipment (Business Days)
0513300403	0513R15A7VPV16SM21FY	3	10 day(s)
0513300405	0513R15A7VPV16SM21HZ	3	10 day(s)
0513860250	0513R18C3VPV130SM21HYB04	3	10 day(s)
0513870226	0513R18C3VPV164SM21HY B04	3	10 day(s)
0513300202	0513R18C3VPV16SM21FZB03	3	10 day(s)
0513300212	0513R18C3VPV16SM21HYB03	3	10 day(s)
0513400212	0513R18C3VPV25SM21HYB04	3	10 day(s)
0513500206	0513R18C3VPV32SM21FZB04	3	10 day(s)
0513500220	0513R18C3VPV32SM21HYB04	3	10 day(s)
0513500254	0513R18C3VPV32SM21HYB04 P1	3	10 day(s)
0513600214	0513R18C3VPV45SM21HYB05	3	10 day(s)
0513700218	0513R18C3VPV63SM21HYB05	3	10 day(s)
0513800248	0513R18C3VPV80SM21HYB05	3	10 day(s)
0513800238	0513R18C3VPV80SM21HYB05P1	3	10 day(s)

GoTo Focused Delivery Program: Pumps

PVV - Fixed Displacement Vane Pumps

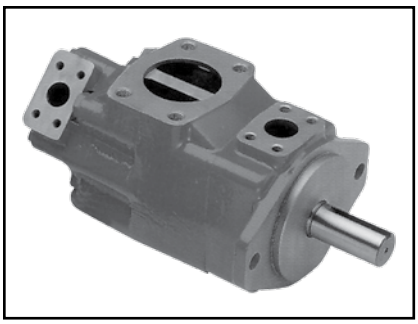

Rexroth PVV product is a fixed displacement vane pump based on the cartridge principle. PVV pumps can be used in a wide spectrum of applications, from low pressure filter / cooler loops to higher pressure systems such as presses and injection molding machines. PVV fixed vane pumps are just one of the many pump options available from the extensive Rexroth portfolio of products.

For complete engineering and design information: ***GoTo www.boschrexroth-us.com/gotopumps***

Features

- 20 different displacement sizes ranging from 18cc/rev (1.1 cu-in/rev) to 193cc/rev (11.8 cu-in/rev)
- Hydraulically balanced design provides long bearing life
- Cartridge replacement simplifies service and repair
- Cartridges are interchangeable with competitive designs
- Displacement changes can be easily performed by swapping cartridges
- Rotational flexibility of port locations optimizes customer interface
- PVV pumps can be coupled to other Rexroth vane, piston and gear products

Technical Data

Mounting style		Flange mounting to SAE J744									
Pipe connections		SAE flange version (fixing threads: UNC)									
Direction of rotation		Clockwise and counter-clockwise									
Drive		Direct, co-axial drive; radial and axial forces cannot be taken up									
Build sizes 1 and 2 (pump cartridge)		**BS1**					**BS2**				
Nominal size (≈ V in cm³)	NS	18	27	36	40	46	40	45	55	60	68
Max. flow at $n = 1500$ min⁻¹, $p = 0.7$ bar (10 PSI) and $\nu = 25$ mm²/s	l/min (gpm)	25 (6.6)	39 (10.3)	53 (14.0)	59 (15.6)	70 (18.5)	59 (15.6)	66 (17.4)	80 (21.1)	89 (23.5)	100 (26.4)
Outlet continuous for PVV p_{max}	bar (psi)	210 (3000)			160 (2300)	140 (2000)	175 (2500)				
Weight	kg (lb)	12 (26.4)					14.8 (32.6)				
Speed at 1 bar (14.5 PSI)	RPM	600–1800									
Build sizes 4 and 5 (pump cartridge)		**BS4**					**BS5**				
Nominal size (≈ V in cm³)	NS	69	82	98	113	122	139	154	162	183	193
Max. flow at $n = 1500$ min⁻¹, $p = 0.7$ bar (10 PSI) and $\nu = 25$ mm²/s	l/min (gpm)	101 (26.7)	120 (31.7)	141 (37.2)	167 (44.1)	177 (46.8)	203 (53.6)	223 (58.9)	234 (61.8)	267 (70.5)	285 (75.3)
Outlet continuous for PVV p_{max}	bar (psi)	175 (2500)					175 (2500)				
Weight	kg (lb)	23 (50.7)					34 (74.9)				
Speed at 1 bar (14.5 PSI)	RPM	600–1800									

Part Number	Description	Max. Quantity	Shipment (Business Days)
R900965314	PVV1-1X/036RJ15DMB	3	10 day(s)

GoTo Focused Delivery Program: Pumps

PGH - Internal Gear Pumps

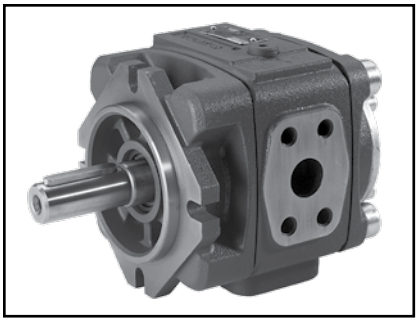

The PGH is a fixed displacement internal gear pump with an extremely versatile design, that's increasing in popularity within many variable speed drive applications. Along with its high pressure rating and low-noise and pulsation levels, the PGH reduces energy consumption and boosts overall system efficiency by providing only the flow and pressure as the system demands.

For complete engineering and design information: ***GoTo www.boschrexroth-us.com/GoTopumps***

Features

- Sizes 5cc through 250cc
- Wide speed range, excellent for variable speed applications
- Radial and axial gap pressure compensation
- Larger sizes have built-in gauge / bleed port
- Flexible combination concept, all pumps have through drive
- Frame size 2 and 3: RE10223
- Frame size 4 and 5: RE10227

Technical Data

Frame Size			2			3			4					
Displacement	V_g	cm^3	5	6	8	11	13	16	20	25	32	40	50	
Allowable speed	n	rpm	600 – 3000						200 – 3000					
Maximum continuous operating pressure (std fluids)	p_n	psi	4568										3625	
Permitted viscosity range		cSt	10 to 300 (restricted to 100 cSt for high speed 3000 rpm operation)											
Fluid temperature (std fluids)		°F	14 to 176											
Weight	m	lbs	9.5	9.7	10.1	10.6	11	11.7	30.9	32	33.1	35.3	37.5	

Frame Size			5						
Displacement	V_g	cm^3	63	80	100	125	160	200	250
Allowable speed	n	rpm	200 – 3000						
Maximum continuous operating pressure (std fluids)	p_n	psi	4568				3045	2465	1958
Permitted viscosity range		cSt	10 to 300 (restricted to 100 cSt for high speed 3000 rpm operation)						
Fluid Temperature (std fluids)		°F	14 to 176						
Weight	m	lbs	92.6	95.9	100.3	105.8	114.6	122.4	133.4

Part Number	Description	Max. Quantity	Shipment (Business Days)
R901147113	PGH4-3X/040RR11VU2	3	10 day(s)
R901147104	PGH4-3X/050RE11VU2	3	10 day(s)
R901147115	PGH5-3X/063RE11VU2	3	10 day(s)

GoTo Focused Delivery Program: Motors

(A)A6VM - Variable Displacement Motors

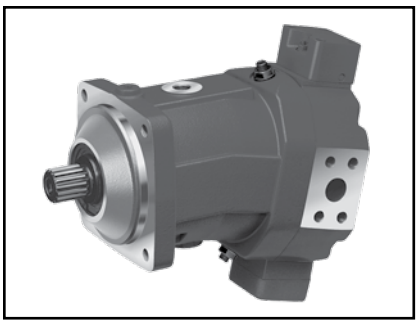

Variable displacement motor (A)A6VM in axial tapered piston rotary group of bent-axis design is available for open and closed circuit applications. It can be used in both mobile and industrial applications. The output speed is dependent on the flow of the pump and the displacement of the motor. The output torque increases with the pressure differential between the high-pressure and low-pressure side and with increasing displacement.

For complete engineering and design information: ***GoTo www.boschrexroth-us.com/GoTomotors***

Features

- Sizes 80, 107, 160
- Series 6
- Axial tapered piston, bent-axis design
- For use in mobile and stationary applications
- Wide control range, high speeds and torque
- Compact, robust motor with long service life
- Cost savings through elimination of gear shifts and possibility of using smaller pumps
- Wide selection of control devices; good starting characteristics
- Graduated Lead Time as follows:
- Quantity 5 or less, Lead Time 10 days
- Quantity 6+, Lead Time 40 days
- Detailed information Series 6: RE91604

Technical Data

Size			80	107	160
Nominal pressure		bar (PSI)	400 (5800)	400 (5800)	400 (5800)
Peak pressure		bar (PSI)	450 (6500)	450 (6500)	450 (6500)
Displacement [1]	$V_{g\,max}$	cm^3 (in^3)	80 (4.88)	107 (6.53)	160 (9.76)
	$V_{g\,0}$	cm^3 (in^3)	0 (0)	0 (0)	0 (0)
Max. speed [2] (while adhering to the maximum permissible flow)	n_{max} at $V_{g\,max}$	rpm	3900	3550	3100
	n_{max} at $V_g < V_{g\,x}$	rpm	6150	5600	4900
	$V_{g\,x} = 0.63 \times V_{g\,max}$	cm^3 (in^3)	51 (3.11)	68 (4.15)	101 (6.16)
	n_{max} at $V_{g\,0}$	rpm	7350	6300	5500
Max. flow	$q_{V\,max}$	L/min (GPM)	312 (82)	380 (100)	496 (131)
Max. torque	T_{max} at $V_{g\,max}$ [3]	Nm (lb-ft)	509 (375)	681 (502)	1019 (752)
Rotary stiffness					
$V_{g\,max}$ to $V_{g/2}$	c_{min}	Nm/rad (lb-ft/rad)	15500 (11432)	21000 (15489)	35300 (26036)
$V_{g/2}$ to $0_{(interpolated)}$	c_{max}	Nm/rad (lb-ft/rad)	47900 (35329)	65200 (48089)	105000 (77444)
Moment of inertia for rotary group	JTW	kgm^2 ($lb\text{-}ft^2$)	0.0080 (0.190)	0.0127 (0.301)	0.0253 (0.600)
Maximum angular acceleration	a	rad/s^2	24000	19000	11000
Filling capacity	V	L (Gal)	1.2 (0.32)	1.5 (0.40)	2.4 (0.63)
Mass (approx.)	m	kg (lbs.)	34 (75)	47 (104)	64 (141)

1) The minimum and maximum displacement are infinitely adjustable, see ordering code, page 3.
(default settings for sizes 250 to 1000 unless specified in the order: $V_{g\,min} = 0.2 \bullet V_{g\,max}$, $V_{g\,max} = V_{g\,max}$).

2) Vg x = 0.75 x Vg max (appr.)

3) Sizes 28 to 200: $\Delta p = 400$ bar (5800 PSI); sizes 250 to 1000: $\Delta p = 350$ bar (5100 PSI)

Caution: Exceeding the permissible limit values may result in a loss of function, a reduction in service life or in the destruction of the axial piston unit. Other permissible limit values with respect to speed variation, reduced angular acceleration as a function of the frequency and the permissible startup angular acceleration (lower than the maximum angular acceleration) can be found in data sheet RE90261.

Part Number	Description	Max. Quantity	Shipment (Business Days)
R902249618	A6VM080HP5000000G/65AWV0C2S7200-0	5	10 day(s)

GoTo Focused Delivery Program: Motors

A10VM - Variable Displacement Motors

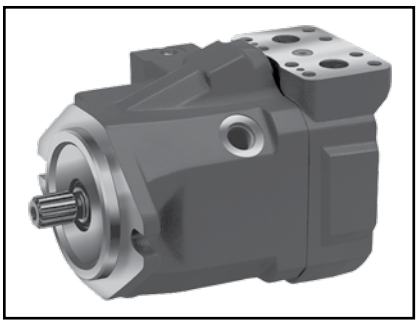

Variable dual displacement motor A10VM in axial swashplate design is available for both open and closed circuit applications. Output speed is directly proportional to inlet flow and inversely proportional to motor displacement and output torque increases proportional to the pressure difference between high and low pressure sides and increasing displacement. Heavy duty design allows for high output speeds, long service life, and high power to weight ratio.

For complete engineering and design information: ***GoTo www.boschrexroth-us.com/GoTomotors***

Features

- Size 45 & 63
- Axial piston swash plate design
- Open and closed circuit
- High permissible output speeds
- Graduated Lead Time as follows:
- Quantity 10 or less, Lead Time 10 days
- Quantity 11+, Lead Time 40 days
- Detailed information: RA91703

Technical Data

Size				45	63
Displacement		$V_{g\ max}$	cm^3 (in^3)	45 (2.75)	62 (3.78)
Speed		n_{max}	rpm	4000	3300
Flow	at n_{max}	$q_{V\ max}$	l/min (GPM)	47.5 (180)	205 (54)
Power	$\Delta p = 280$ bar (4000 psi)	p_{max}	kW	84	95
Torque	$\Delta p = 280$ bar (4000 psi)	T_{max}	Nm (lb/ft)	200 (146)	276 (200)
Weight (approx.)		m	kg (lbs.)	18 (39.7)	26 (57.3)

Part Number	Description	Max. Quantity	Shipment (Business Days)
R902505324	A10V M 45 HZ /52W2-VRC66N007	10	10 day(s)
R902503914	A10V M 63 HZ /52W2-VWC60N000	10	10 day(s)

GoTo Focused Delivery Program: Motors

(A)A2FM - Fixed Displacement Motors

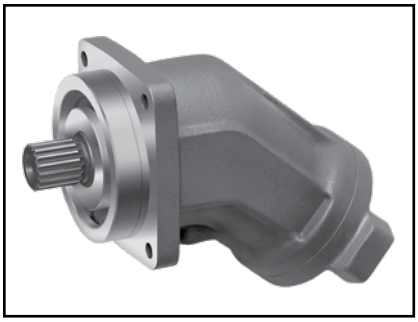

Fixed motor with axial tapered piston rotary group of bent axis design A(A)2FM, is available for hydrostatic drives in open and closed circuits. For use in mobile and stationary application areas, the output speed is dependent on the flow of the pump and the displacement of the motor. The output torque increases with the pressure differential between the high and low pressure sides. Careful selection of the displacements offered, permit sizes to be matched to practically every application.

For complete engineering and design information: ***GoTo www.boschrexroth-us.com/gotomotors***

Features

- Series 6, Sizes 16 to 180
- Fixed motor with axial tapered piston rotary group of bent axis design
- Open and closed circuits
- High power density and overall efficiency
- Compact design
- Graduated Lead Time as follows:
- Quantity 5 or less, Lead Time 10 days
- Quantity 6+, Lead Time 40 days
- Detailed information: Series 6 - RE91001

Technical Data

Size				16	28	32	45	56	63
Displacement		V_g	cm^3 (in^3)	16 (0.98)	28.1 (1.71)	32 (1.95)	45.6 (2.78)	56.1 (3.42)	63 (3.84)
Max. speed [1]		n_{max}	rpm	8000	6300	6300	5600	5000	5000
		$n_{max\ intermit.}$ [1]	rpm	8800	6900	6900	6200	5500	5500
Max. flow		$q_{V\ max}$	l/min (GPM)	128 (33.9)	176 (46.6)	201 (52.2)	255 (67.4)	280 (74.0)	315 (83.1)
Torque	Δp = 5100 PSI (350 bar)	T	Nm (lb-ft)	88 (66)	156 (115)	178 (132)	254 (188)	312 (231)	350 (259)
	Δp = 5800 PSI (400 bar)	T	Nm (lb-ft)	100 (75)	178 (131)	213 (150)	290 (213)	356 (263)	400 (295)
Weight (approx.)		m	kg (lbs.)	5.4 (12)	9.5 (21)	9.5 (21)	13.5 (30)	18 (40)	18 (40)

Size				80	90	107	125	160	180
Displacement		V_g	cm^3 (in^3)	4.91 (80.4)	5.49 (90)	6.51 (106.7)	7.63 (125)	9.79 (160.4)	10.98 (180)
Max. speed [1]		n_{max}	rpm	4500	4500	4000	4000	3600	3600
		$n_{max\ intermit.}$ [1]	rpm	5000	5000	4400	4400	4000	4000
Max. flow		$q_{V\ max}$	l/min (GPM)	360 (95.6)	405 (106.9)	427 (112.7)	500 (132.1)	577 (152.5)	646 (171.1)
Torque	Δp = 5100 PSI (350 bar)	T	Nm (lb-ft)	445 (332)	501 (371)	595 (440)	697 (516)	889 (662)	1001 (742)
	Δp = 5800 PSI (400 bar)	T	Nm (lb-ft)	508 (377)	572 (422)	680 (500)	796 (587)	1016 (753)	1144 (844)
Weight (approx.)		m	kg (lbs.)	23 (51)	23 (51)	32 (71)	32 (71)	45 (99)	45 (99)

1) Intermittent maximum speed: overspeed at discharge and over-running travel operations, $t < 5$ s and $\Delta p < 2200$ psi (150 bar)

Part Number	Description	Max. Quantity	Shipment (Business Days)
R902137843	AA2FM107/61W-VSD510	5	10 day(s)
R902138182	AA2FM125/61W-VSD510	5	10 day(s)
R902137733	AA2FM125/61W-VSD520	5	10 day(s)
R902197791	AA2FM16/61W-VSC530	5	10 day(s)
R902193516	AA2FM160/61W-VSD520	5	10 day(s)
R902193869	AA2FM180/61W-VSD510	5	10 day(s)
R902193712	AA2FM180/61W-VSD520	5	10 day(s)
R902198240	AA2FM28/61W-VSD520	5	10 day(s)
R902193517	AA2FM28/61W-VSD530	5	10 day(s)
R902197566	AA2FM28/61W-VSD540	5	10 day(s)
R902193710	AA2FM32/61W-VBD540	5	10 day(s)
R902202055	AA2FM32/61W-VSD520	5	10 day(s)
R902198042	AA2FM32/61W-VSD540	5	10 day(s)
R902193533	AA2FM45/61W-VPD510	5	10 day(s)
R902193514	AA2FM45/61W-VSD510	5	10 day(s)
R902196957	AA2FM45/61W-VSD520	5	10 day(s)
R902160543	AA2FM56/61W-VBD510	5	10 day(s)
R902161224	AA2FM63/61W-VSD510	5	10 day(s)
R902160055	AA2FM63/61W-VSD520	5	10 day(s)
R902137826	AA2FM80/61W-VSD510	5	10 day(s)
R902137579	AA2FM80/61W-VUDN520	5	10 day(s)

GoTo Focused Delivery Program: Motors

A10FM - Fixed Displacement Motors

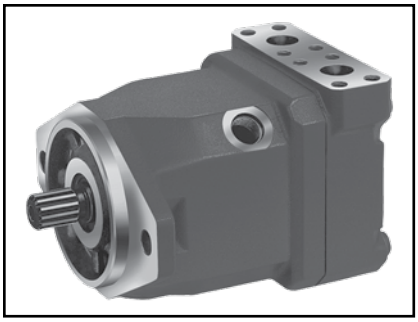

Fixed displacement axial piston motor A10FM in swashplate design is available for both open and closed circuit applications. For use in a widearray of mobile and industrial applications, the well-proven A10-rotary group design boasts a high power to weight ratio along with long service life and low noise levels. The output speed is proportional to the inlet flow and torque increases with the pressure differential between the high and low pressure sides.

For complete engineering and design information: ***GoTo www.boschrexroth-us.com/GoTomotors***

Features

- Sizes 23 to 63
- Axial piston swashplate design
- Open and closed circuit
- High permissible output speeds
- Graduated Lead Time as follows:
- Quantity 10 or less, Lead Time 10 days
- Quantity 11+, Lead Time 40 days
- Detailed information: RE91172

Technical Data

Size				23	28	37	45	58	63
Displacement		$V_{g\ max}$	cm^3 (in^3)	23.5 (1.43)	28.5 (1.73)	36.7 (2.24)	44.5 (2.71)	58 (3.53)	63.1 (3.84)
Speed		n_{max}	rpm	4900	4700	4200	4000	3600	3400
Flow	at n_{max}	$q_{V\ max}$	l/min (GPM)	115 (30.4)	134 (35.4)	154 (40.7)	178 (47)	209 (55.2)	215 (56.8)
Power	$\Delta p = 280$ bar (4000 psi)	p_{max}	kW	53.6	62.5	71.8	83.1	97.4	100.1
Torque	$\Delta p = 280$ bar (4000 psi)	T_{max}	Nm (lb/ft)	105 (77.4)	127 (93.7)	163 (120)	198 (146)	258 (190)	281 (207)
Weight (approx.)		m	kg (lbs.)	12 (26.5)	12 (26.5)	17 (37.5)	17 (37.5)	22 (48.5)	22 (48.5)

Part Number	Description	Max. Quantity	Shipment (Business Days)
R902506856	A A10F M 45 /52W-VRC60N000	10	10 day(s)
R902534861	A10F M 37 /52W-VRC60N000	10	10 day(s)
R902406027	A10F M 45 /52W-VRC66N000	10	10 day(s)
R902505312	A10F M 45 /52W-VWC66N000	10	10 day(s)
R902505316	A10F M 63 /52W-VWC60N000	10	10 day(s)
R902505747	A10F M 63 /52W-VWC60N000	10	10 day(s)
R902402079	A A10F M 28 /52W-VRC60N000	10	10 day(s)

GoTo Focused Delivery Program: Motors

AZMF - External Gear Motors

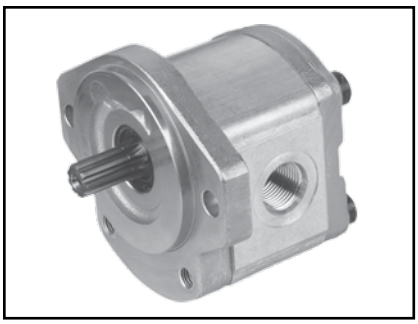

Bosch Rexroth has been involved with the design, development and manufacture of gear motors for many decades. Well-proven designs, the use of specially developed materials, constant testing and sophisticated mass production techniques ensure products of the very highest quality.

For complete engineering and design information: ***GoTo www.boschrexroth-us.com/gotomotors***

Features

- Sizes 8 to 22 cc
- High pressures with small installation space and low weight
- Wide speed ranges
- Wide viscosity and temperature ranges
- Reversible motors for 2- and 4-quadrant operation
- Plain bearings for high loads
- Consistently high quality owing to large-scale production
- Many design variants available

Technical Data

Size			008	011	014	016	019	022
Displacement		cm^3/rev (in^3/rev)	8.2 (0.50)	11.3 (0.69)	14.3 (0.87)	16.5 (1.01)	19.5 (1.19)	22.9 (1.40)
Max. continuous pressure	p_1	bar (PSI)	210 (3045)	210 (3045)	210 (3045)	210 (3045)	180 (2610)	180 (2610)
Max. starting pressure	p_2	bar (PSI)	280 (4060)	280 (4060)	280 (4060)	280 (4060)	210 (3045)	210 (3045)
Min. rotational speed Max. rotational speed	p_1	min^{-1}	500 4000	500 3500	500 3000	500 3000	500 3000	500 3000
Motor outlet pressure Leakage-oil line pressure	p_A p_L	bar (PSIA)	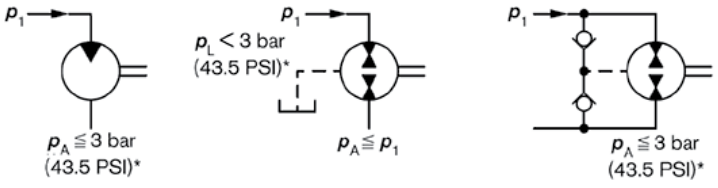					

*) Short-term when starting 10 bar (145 PSI)

Part Number	Description	Max. Quantity	Shipment (Business Days)
9511290007	AZ-M-F-12-008-UQR12ML	3	10 day(s)
9511290015	AZ-M-F-12-014-UQR12ML-S0022	3	10 day(s)
9511290029	AZ-M-F-12-019-UQR12ML-S0018	3	10 day(s)
9511290035	AZ-M-F-12-019-UQR12ML-S0030	3	10 day(s)
0511625001	AZMF-11-016RFB20MB	3	10 day(s)
9511290013	AZMF-12-008-UQR12ML-S0022	3	10 day(s)
9511290014	AZMF-12-011-UQR12ML-S0022	3	10 day(s)
9511290027	AZMF-12-014-UQR12ML-S0018	3	10 day(s)
9511290010	AZMF-12-016-UQR12ML	3	10 day(s)
9511290017	AZMF-12-019-UQR12ML-S0022	3	10 day(s)
9511290018	AZMF-12-022-UQR12ML-S0022	3	10 day(s)

GoTo Focused Delivery Program: Check Valves

SV & SL - Check Valves

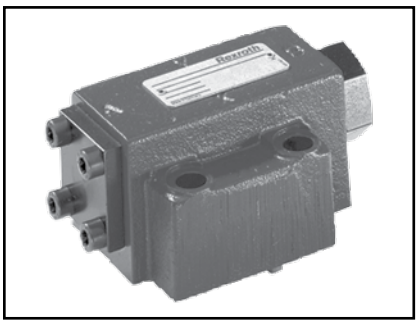

The SV & SL valves are hydraulic pilot operated check valves of poppet type design which may be opened to permit flow in the reverse direction. These valves are used for the isolation of operating circuits which are under pressure, i.e. as a safe guard against the lowering of a load when a line break occurs or against creeping movement of hydraulically locked actuators. The valve basically comprises of the housing, the poppet, a compression spring, the control spool as well as optional decompression feature as a ball poppet valve.

For complete engineering and design information: ***GoTo www.boschrexroth-us.com/gotocheck***

Features

- Sizes 10 to 30
- For subplate mounting
- Connection location to ISO 5781
- With internal SV or external SL pilot oil drain
- With or without decompression feature, optional
- Version with decompression feature for dampened decompression (minimizing possible pressure shocks)

Technical Data

Size			10	20	30
Maximum operating pressure	p_{max}	bar (PSI)	315 (4600)	315 (4600)	315 (4600)
Control pressure		bar (PSI)	5 to 315 (72.5 to 4600)	5 to 315 (72.5 to 4600)	5 to 315 (72.5 to 4600)

Part Number	Description	Max. Quantity	Shipment (Business Days)
R900483371	SL 10 PA1-4X/	5	10 day(s)
R900587559	SL 20 PA1-4X/	5	10 day(s)
R900501547	SL 20 PA1-4X/V	3	10 day(s)
R900587560	SL 30 PA1-4X/	5	10 day(s)
R900500095	SL 30 PA1-4X/V	5	10 day(s)
R900587557	SV 20 PA1-4X/	5	10 day(s)

GoTo Focused Delivery Program: Check Valves

Z1S - Check Valves

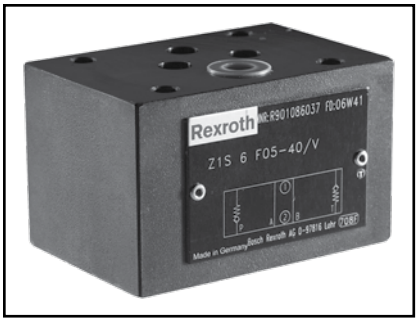

Valve type Z1S is a direct operated check valve of sandwich plate design. They provide line contact closure in one direction and allows free flow in the opposite direction. The check function can be in one of several ports, or dual ports. The check function orientation can also be defined by model coding.

For complete engineering and design information: ***GoTo www.boschrexroth-us.com/gotocheck***

Features

- Size 6 and 10
- For size 6 mounting: porting pattern according to ISO 4401-3, NFPA T3.5.1M R1, and ANSI B 93.7 D 03
- For size 10 mounting: porting pattern according to ISO 4401-5, NFPA T3.5.1M R1, and ANSI B93.7 D 05
- Various isolating functions
- Various cracking pressures
- Check valve made of carbon fiber-reinforced plastic
- Excellent compatibility with various hydraulic fluids

Technical Data

Size			6	10
Operating pressure	p_{max}	bar (PSI)	350 (5100)	315 (4600)
Cracking pressure		bar (PSI)	0.5 (7.25), 1.5 (21.75), 3.0 (43.5), 5.0 (72.5)	0.5 (7.25), 3.0 (43.5), 5.0 (72.5)
Flow	$q_{V\,max}$	l/min (GPM)	40 (10.6)	100 (26.4)

Part Number	Description	Max. Quantity	Shipment (Business Days)
R901086051	Z1S 6 P05-4X/V	5	10 day(s)

GoTo Focused Delivery Program: Check Valves

Z2S - Piloted-to-Open Check Valves

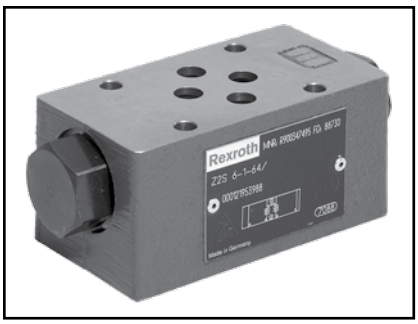

Models Z2S are pilot operated check valves in a sandwich plate design. They provide line contact closure in one or two actuator ports, even during idle periods. Piloted to open, utilizing a pressure signal from the opposite actuator port provides a self-contained function.

For complete engineering and design information: ***GoTo www.boschrexroth-us.com/gotocheck***

Features

- Sizes 6 to 22
- Porting pattern according to ISO 4401-3, 5, 7, 8; NFPA T3.5.1M R1, and ANSI B93.7 D 03, D 05, D 07, D 08
- For the leak-free isolation of one or two actuator ports
- Various cracking pressures

Technical Data

Size			6	10	16	22
Component series			6X	3X	5X	5X
Operating pressure	p_{max}	bar (PSI)	315 (4600)	315 (4600)	315 (4600)	315 (4600)
Cracking pressure		bar (PSI)	1.5, 3, 7 (22, 42, 102)	1.5, 3, 6, 10 (22, 42, 87, 145)	3, 5, 7.5, 10 (42, 92.5, 109, 145)	3, 5, 7.5, 10 (42, 92.5, 109, 145)
Flow	$q_{V\ max}$	l/min (GPM)	60 (15.9)	120 (31.7)	300 (79.3)	450 (118.9)

Part Number	Description	Max. Quantity	Shipment (Business Days)
R900407394	Z2S 10-1-3X/	5	10 day(s)
R900407439	Z2S 10-1-3X/V	5	10 day(s)
R900412459	Z2S 16-1-5X/V	5	10 day(s)
R900436495	Z2S 22-1-5X/V	5	10 day(s)
R900347495	Z2S 6-1-6X/	5	10 day(s)
R900347504	Z2S 6-1-6X/V	5	10 day(s)

GoTo Focused Delivery Program: Check Valves

ZSF - Filling Valves

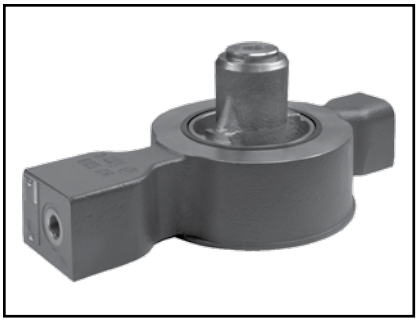

The valve type ZSF is a pilot operated check valve in sandwich plate design. It is used for the leakage-free isolation of pressurized working circuits (e.g. pressing cylinders). Due to its favorable flow characteristics and the low cracking pressure of the main poppet, it is particularly suitable on presses.

For complete engineering and design information: ***GoTo www.boschrexroth-us.com/gotocheck***

Features

- Sizes 32 to 200
- Pilot operated check valve in sandwich plate design
- With or without pre-opening, optional
- Control by built-on directional spool valve or directional seat valve, optional
- Integrated high-pressure connection (size 32 to 160)
- Integrated throttle check valve (size 200)

Technical Data

Size			30
Maximum operating pressure	– Port B, P	bar (PSI)	350 (5100)
	– Port X	bar (PSI)	150 (2175)
	– Port A	bar (PSI)	16 (232)
Control pressure		bar (PSI)	~0.12 (~1.74)

Part Number	Description	Max. Quantity	Shipment (Business Days)
R901089756	ZSF 125 F1-1-2X/M/01	5	10 day(s)

GoTo Focused Delivery Program: Check Valves

SFA - Prefill Valves

Isolator valves that block the flow in one direction safely and leakage-free and simultaneously allow for free flow in the opposite direction (check valves, prefill valves and shut-off valves).

For complete engineering and design information: ***GoTo www.boschrexroth-us.com/gotocheck***

Features

- Size 25 ... 80
- Pilot operated check valve
- For threaded connection (size 25 and 32)
- For flange connection according to ISO 6162-1 (from size 40)
- For direct attachment to the working cylinder
- With and without pre-decompression, optional
- Integrated high-pressure connection
- Detailed information: RE20485

Technical Data

Maximum operating pressure	– Port B, P	bar	350
	– Port X	bar	150
	– Port A	bar	16
Cracking pressure		bar	~0.12
Hydraulic fluid temperature range (at the valve working ports)		°C	–30 ... +80
Viscosity range		mm^2/s	10 ... 800

Part Number	Description	Max. Quantity	Shipment (Business Days)
R900974273	SFA 50 FT0-1X/M/01	3	10 day(s)

GoTo Focused Delivery Program: Directional Valves

SED & SEW - Directional Poppet Valves

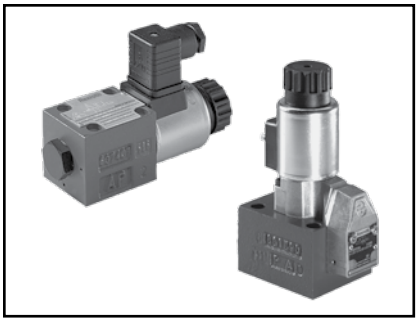

Directional control valves, model SED and SEW, are direct (SED) or lever (SEW) actuated directional poppet valves with solenoid actuation. They control the start, stop, and direction of fluid flow. Poppet valves, or seat valves, provide a line contact closure for applications where spool valve leakage or silting is not desirable.

For complete engineering and design information: ***GoTo www.boschrexroth-us.com/gotodirectional***

Features

- Size 6 and 10
- For size 6 mounting: porting pattern according to ISO 4401-3, NFPA T3.5.1M R1, and ANSI B 93.7 D 03
- For size 10 mounting: porting pattern according to ISO 4401-5, NFPA T3.5.1M R1, and ANSI B93.7 D 05
- Blocked port is leak-free when completely shifted
- Solenoids with detachable coil
- Pressure-tight chamber does not have to be opened for changing the coil (type SED)
- Reliable switching when under pressure over longer periods of standstill

Technical Data

Type SED				
Size			**6**	**10**
Operating pressure	p_{max}	bar (PSI)	350 (5100)	350 (5100)
Flow	$q_{V\,max}$	l/min (GPM)	25 (6.6)	40 (10.6)

Type SEW				
Size			**6**	**10**
Operating pressure	p_{max}	bar (PSI)	420/630 (6100/9100)	420/630 (6100/9100)
Flow	$q_{V\,max}$	l/min (GPM)	25 (6.6)	40 (10.6)

Part Number	Description	Max. Quantity	Shipment (Business Days)
R900052392	M-3SED 6 CK1X/350CG24N9K4	5	10 day(s)
R900052621	M-3SED 6 UK1X/350CG24N9K4	5	10 day(s)
R900075563	M-3SEW 10 U1X/420MG24N9K4	5	10 day(s)
R900566273	M-3SEW 6 C3X/420MG24N9K4	5	10 day(s)
R900049834	M-3SEW 6 C3X/420MG24N9K4/V	5	10 day(s)
R900204628	M-3SEW 6 C3X/630MG24N9K4/V	5	10 day(s)
R900566283	M-3SEW 6 U3X/420MG24N9K4	5	10 day(s)
R900570174	M-3SEW 6 U3X/420MG24N9K4/V	5	10 day(s)
R900570744	M-3SEW 6 U3X/420MG96N9K4	5	10 day(s)
R900056442	M-3SEW 6 U3X/420MG96N9K4/V	5	10 day(s)
R900566289	M-3SEW 6 U3X/630MG24N9K4	5	10 day(s)
R900205344	M-3SEW 6 U3X/630MG96N9K4	5	10 day(s)

GoTo Focused Delivery Program: Directional Valves

4WMM & 4WMR - Directional Spool Valves

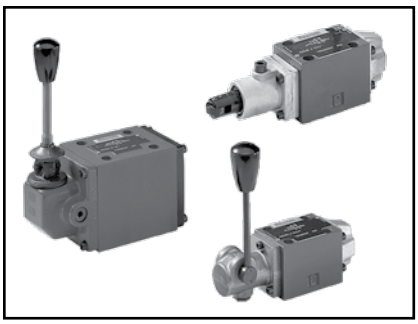

Directional valves type WMM are lever operated directional spool valves. They control the start, stop, and direction of a flow. These directional valves basically consist of housing; lever; control spool; return springs. A full array of spools are possible with variations for distended operation on both 2-position or 3-position functions. Flow and pressure rates from 4000 PSI to 5000 PSI and 16 GPM to 32 GPM cover a wide range of applications.

For complete engineering and design information: ***GoTo www.boschrexroth-us.com/gotodirectional***

Features

- Size 6 and 10
- For mounting Size 6: Porting pattern according to ISO 4401-3, NFPA T3.5.1M R1, and ANSI B 93.7 D 03
- For mounting Size 10: Porting pattern according to ISO 4401-5, NFPA T3.5.1M R1, and ANSI B93.7 D 05
- Operation by means of manual lever or roller/plunger
- Detailed information: Size 6 - RE22280, Size 10 - RE22334

Technical Data

Size			6	10
Operating pressure	p_{max}	bar (PSI)	350 (5100)	350 (5100)
Flow	$q_{V\,max}$	l/min (GPM)	60 (16)	160 (42.3)

Part Number	Description	Max. Quantity	Shipment (Business Days)
RR900467936	4WMM 6 E5X/	5	10 day(s)
R900405611	4WMM 6 E5X/F	5	10 day(s)
R900471209	4WMM 6 G5X/	5	10 day(s)
R900469533	4WMM 6 G5X/F	5	10 day(s)
R900469302	4WMM 6 J5X/	5	10 day(s)
R900465984	4WMR 6 D5X/	5	10 day(s)
R900918059	H-4WMM 16 E7X/	5	10 day(s)

GoTo Focused Delivery Program: Directional Valves

WE - Directional Spool Valves

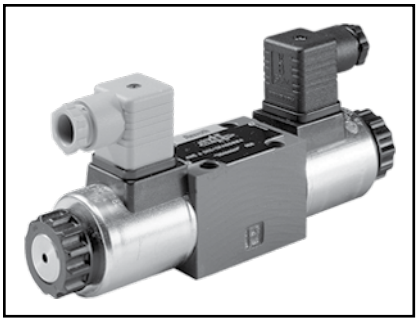

Directional valves type WE are solenoid operated directional spool valves. They control the start, stop, and direction of a flow. These directional valves consist of housing; one or two solenoids; control spool; and no, one, or two return springs. A full array of spools are possible with variations in voltage and electrical connection, all within the program. Flow and pressure rates from 4000 PSI to 5000 PSI and 21 GPM to 32 GPM cover a wide range of applications.

Select FM-approved explosion-proof variants (WE...VP1) now available through the GoTo Program. Intended for environments according to Explosion Protection Directive 2014/34/EU: I M2; II 2G, with protection class: Ex ib I Mb / Ex ib IIC T6 Gb according to EN 60079-0 / EN 60079-11.

For complete engineering and design information: ***GoTo www.boschrexroth-us.com/GoToDirectional***

Features

- Sizes 6 to 10
- For size 6 subplate mounting: porting pattern according to ISO 4401-3, NFPA T3.5.1M R1, and ANSI B93.7 D 03
- For size 10 subplate mounting: porting pattern according to ISO 4401-5, NFPA T3.5.1M R1, and ANSI B93.7 D 05
- Wet-pin AC or DC solenoids
- Solenoids with detachable coil
- Electrical connection as individual or central connection
- Optional spool position monitoring (RE24830)
- Smooth switching characteristics 3)
- For WE...VPI explosion-proof variant:
- - FM Approval Certificate: 3055770 (US) & 3055770C (Canada)

Technical Data

Size			6				
Version			1)	2)	3)	4)	7)
Operating pressure	p_{max}	bar (PSI)	315 (4600)	350 (5100)	350 (5100)	315 (4600)	350 (5100)
Flow	$q_{V\ nom}$	l/min (GPM)	60 (15.8)	80 (21)	60 (15.8)	60 (15.8)	70 (18.4)

Size			10		
Version			3)	5)	6)
Operating pressure	p_{max}	bar (PSI)	315 (4600)	315 (4600)	315 (4600)
Flow	$q_{V\ nom}$	l/min (GPM)	100 (26.4)	120 (32)	120 (32)

1) Standard valve, size 6 (DC solenoid only)
2) Heavy duty valve
3) Soft switch valves
4) Reduced electrical power consumption
5) Standard valve, size 10
6) 5-chamber version (DC solenoid only)
7) Explostion-proof variant

"=AN": solenoid identity is to ANSI guidelines, wherein "A" solenoid energized produces flow from "P–>A"
"SO 407": indicates the solenoid power consumption is 8 watts
"K72L": defines an M12 molded electrical connection on each solenoid vs a single connection to a conduit/central box arrangement

Part Number	Description	Max. Quantity	Shipment (Business Days)
R978017740	3WE 6 A6X/EG24N9K4/62	20	10 day(s)
R978017744	4WE 6 C6X/EG24N9K4/62	20	10 day(s)
R900550589	4WE 6 D6X/EG24N9DAL	20	10 day(s)
R900561274	4WE 6 D6X/EG24N9K4	20	10 day(s)
R978017922	4WE 6 D6X/EG24N9K4/62	20	10 day(s)
R900910413	4WE 6 D6X/EG24N9K4QMBG24	20	10 day(s)
R978017739	4WE 6 D6X/EW110N9DAL/62	20	10 day(s)
R900551704	4WE 6 D6X/EW110N9K4	20	10 day(s)
R978017734	4WE 6 D6X/EW110N9K4/62	20	10 day(s)
R978017763	4WE 6 D6X/OFEG24N9K4/62	20	10 day(s)
R978878249	4WE 6 E6X/EG12N9DA/62	20	10 day(s)
R978017783	4WE 6 E6X/EG12N9K4/62	20	10 day(s)
R900979840	4WE 6 E6X/EG24N9DAL	20	10 day(s)
R978017870	4WE 6 E6X/EG24N9DAL/62	20	10 day(s)
R900561278	4WE 6 E6X/EG24N9K4	20	10 day(s)
R978017750	4WE 6 E6X/EG24N9K4/62	20	10 day(s)
R978875049	4WE 6 E6X/EW110N9DA/62	20	10 day(s)
R978873115	4WE 6 E6X/EW110N9DAL/62	20	10 day(s)
R978017737	4WE 6 E6X/EW110N9K4/62	20	10 day(s)
R978026086	4WE 6 E73-6X/EG12NK4/A12	20	10 day(s)
R978017779	4WE 6 G6X/EG12N9DAL/62	20	10 day(s)
R978017762	4WE 6 G6X/EG12N9K4/62	20	10 day(s)
R900561282	4WE 6 G6X/EG24N9K4	20	10 day(s)
R901224429	4WE 6 G6X/EG24N9K4/62	20	10 day(s)
R978872815	4WE 6 G6X/EW110N9DA/62	20	10 day(s)
R978017738	4WE 6 G6X/EW110N9K4/62	20	10 day(s)
R900561286	4WE 6 H6X/EG24N9K4	20	10 day(s)
R978017754	4WE 6 H6X/EG24N9K4/62	20	10 day(s)
R978017797	4WE 6 H6X/EW110N9K4/62	20	10 day(s)
R900567496	4WE 6 J6X/EG12N9K4	20	10 day(s)
R978017761	4WE 6 J6X/EG12N9K4/62	20	10 day(s)
R900774083	4WE 6 J6X/EG12N9K40 SO859	20 / >20	10 / 20 day(s)
R978029425	4WE 6 J6X/EG12NK40/62 SO43A-1799A	20 / >20	10 / 20 day(s)
R900920381	4WE 6 J6X/EG24N9DAL	20	10 day(s)
R900561288	4WE 6 J6X/EG24N9K4	20	10 day(s)
R978017756	4WE 6 J6X/EG24N9K4/62	20	10 day(s)
R901105200	4WE 6 J6X/EG24N9K4/62=CSA	20	10 day(s)
R900774087	4WE 6 J6X/EG24N9K40 SO859	20	10 day(s)
R901235359	4WE 6 J6X/EG24N9K72L=AN	20 / 20	10 / 20 day(s)
R978874065	4WE 6 J6X/EW110N9DA/62	20	10 day(s)
R978017736	4WE 6 J6X/EW110N9DAL/62	20	10 day(s)
R900551703	4WE 6 J6X/EW110N9K4	20	10 day(s)
R978017733	4WE 6 J6X/EW110N9K4/62	20	10 day(s)
R978017748	4WE 6 Y6X/EG24N9K4/62	20	10 day(s)
R901278760	4WE 10 D5X/EG24N9K4/M	3	10 day(s)
R901278761	4WE 10 E5X/EG24N9K4/M	3	10 day(s)
R901278744	4WE 10 J5X/EG24N9K4/M	3	10 day(s)
R901278776	4WE 10 L5X/EG24N9K4/M	3	10 day(s)

4WEH - Directional Spool Valves

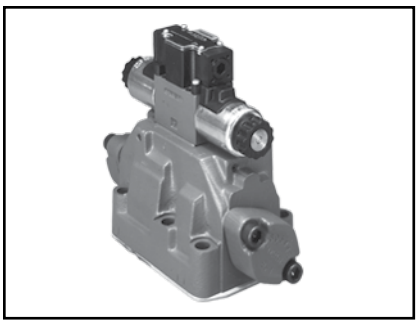

Directional valves type WEH are solenoid operated directional spool valves. They control the start, stop, and direction of a flow. These pilot operated directional valves consist of a pilot control valve and main stage with spring or hydraulic centering options. Additionally, the pilot and drain configuration may be selected. A full array of spools are possible with variations in voltage and electrical connection, all within the program. Flow and pressure rates from 4000 PSI to 5000 PSI and 42 GPM to 120 GPM cover a wide range of applications.

For complete engineering and design information: ***GoTo www.boschrexroth-us.com/GoToDirectional***

Features

- Sizes 10 to 22
- Porting pattern according to DIN 24340 form A and ISO 4401-5, 7, 8; NFPA T3.5.1M R1, and ANSI B93.7 D 05, D 07, D 08
- Wet-pin AC or DC solenoids
- Spring and/or pressure return of the main spool to its initial position
- Spring centering (size 10, 16 & 22)
- Spring or pressure centering (sizes 16 & 22)
- Electrical connection as individual connection or central connection
- Optional switching time adjustment
- Stroke limitation of the main spool, optional
- CSA certified part numbers available in all sizes
- Detailed information: RE24751

Technical Data

Size			10	16	22
Operating pressure	p_{max}	bar (PSI)	350/280 (5100/4060)	350/280 (5100/4060)	350/280 (5100/4060)
Flow	$q_{V\,max}$	l/min (GPM)	160 (42.3)	300 (79.3)	450 (118.9)

Part Number	Description	Max. Quantity	Shipment (Business Days)
R900943462	4WEH 10 D4X/6EG24N9ETK4/B10	5	10 day(s)
R900948924	4WEH 10 J4X/6EG24N9ETK4/B10	5	10 day(s)
R900717396	4WEH 10 J4X/6EW110N9ETK4/B10	5	10 day(s)
R900923875	4WH 16 E7X/	3	10 day(s)
R900608720	4WEH 16 E7X/6EG24N9K4/B10	5	10 day(s)
R900248291	4WEH 16 HD7X/O6EG24N9ETK4/B10	5	10 day(s)
R900930431	4WEH 16 J7X/6EG24N9ETK4/B10	5	10 day(s)
R900939187	4WEH 16 J7X/6EW110N9ETK4/B10	5	10 day(s)
R978913434	4WEH 22 D7X/6EW110N9EDAL/B10	5	10 day(s)
R978891260	4WEH 22 E7X/6EG24N9EK4 SO43A-1058A	5	10 day(s)
R900932659	4WEH 22 E7X/6EG24N9EK4/B10	5	10 day(s)
R900943534	4WEH 22 E7X/6EG24N9ETK4/B10	5	10 day(s)
R901225800	4WEH 22 G7X/6EW110N9EDA/B10	5	10 day(s)
R900932049	4WEH 22 J7X/6EG24N9ETK4/B10	5	10 day(s)
R901298657	4WEH 22 R7X/6EG24N9EK4/12B10	5	10 day(s)
R900932940	H-4WEH 25 J6X/6EG24N9ETK4/B10D3	5	10 day(s)

GoTo Focused Delivery Program: Directional Valves

WP & WN - Directional Valves w/ Fluid Actuation

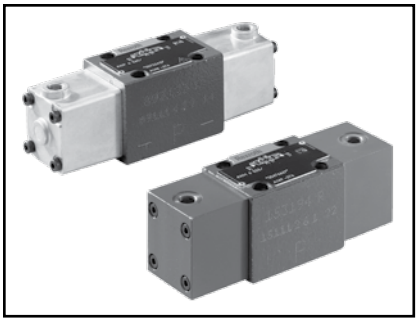

Valves of type WP and WN are directional spool valves with fluid actuation. They control the start, stop, and direction of flow. A full array of spools are available for both the WP and WN operator.

For complete engineering and design information: ***GoTo www.boschrexroth-us.com/GoToDirectional***

Features

- Size 6 and 10
- Direct operated directional spool valve
- Porting pattern according to DIN 24340 form A (without locating hole)
- Porting pattern according to ISO 4401-03-02-0-05 and NFPA T3.5.1 R2-2002 D03 (with locating hole)
- Detailed information: Size 6 RE22282, Size 10 - RE22334

Technical Data

Size			Size 6	Size 10
Maximum operating pressure	p_{max}	bar (PSI)	315 (4600)	350 (5100)
Flow	$q_{v\ nom}$	l/min (GPM)	60 (15.8)	160 (42.3)

Part Number	Description	Max. Quantity	Shipment (Business Days)
R978919115	4WP 6 C6X/N/5	5	10 day(s)
R978917418	4WP 6 D6X/5	5	10 day(s)
R978917419	4WP 6 E6X/5	5	10 day(s)
R978917421	4WP 6 J6X//5	5	10 day(s)
R901470636	4WN 10 E5X//V/5	3	10 day(s)

GoTo Focused Delivery Program: Directional Valves

Z4WEH - Directional Shut-off Valves

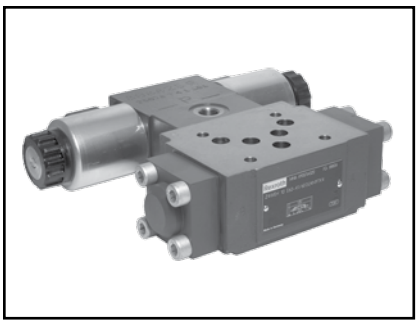

Valve type Z4WEH are directional spool valves with electrohydraulic actuation. They control the start and stop of a flow, and function as an emergency on-off isolating valve or on-off isolating/bypass valve, primarly used for servo/proportional systems.

For complete engineering and design information: ***GoTo www.boschrexroth-us.com/GoToDirectional***

Features

- Sizes 10
- Directional spool valve, pilot operated
- Electrohydraulic (type WEH) actuation
- Hydraulic (type WH) actuation
- Function as shut-off through-valve or shut-off/through valve/short-circuit valve
- Free flow in P and T in every spool position
- Porting pattern to ISO 4401-05-04-0-05
- Wet-pin DC or AC voltage solenoids, optional
- Manual override, optional
- Electrical connection as individual or central connection
- Switching time adjustment, optional
- Stroke adjustment of main spool, optional
- Inductive position switch and proximity sensors

Technical Data

Size			10
Maximum operating pressure	p_{max}	bar (PSI)	315 (4600)
Flow	$q_{V\,max}$	l/min (GPM)	160 (42)

Part Number	Description	Max. Quantity	Shipment (Business Days)
R900940791	Z4WE 6 E63-3X/EG24K4QMAG24	3	10 day(s)

GoTo Focused Delivery Program: Directional Valves

LC + LFA - Logic valves for direction functions

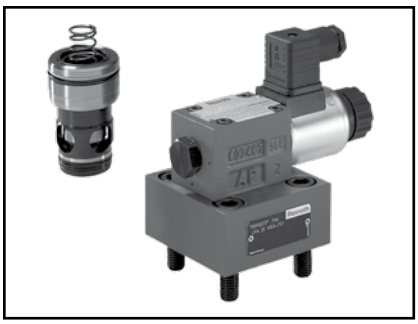

Logic valves consist of a cartridge (LC) and cover (LFA) which are ordered separately. The directional valve cartridges have area ratios to suit application needs. LC..A has a 50% or (2:1) area ratio. LC..B has a 7% (14.3:1) area ratio. Cracking pressure is determined by spring code (ex: 00 = no spring, 10 = 1 bar). The LC without damping nose has option E. The LC with damping nose has option D. The LFA for direction functions have many configurations (D, WEA, GWA, KWA) with various options. When the cover accepts a directional pilot valve, this (4WE6, SEW, SED) must be specified separately. The standard LFA includes metric fasteners.

For complete engineering and design information: ***GoTo www.boschrexroth-us.com/GoToDirectional***

Features

- Sizes 16, 25, 32, 40, 50, 63
- Mounting cavity and connections to DIN ISO 7368
- LC has 2 area ratios, various springs, optional damping nose
- Control cover with remote control port
- Control cover for mounting directional spool or poppet valve
- Detailed information: RE21010 (LC..A, B)

Technical Data

Size		16	25	32	40	50	63
Maximum pressure without directional valve	bar	420					
Maximum pressure ports A, B, X, Z1, Z2**	bar	315, 350, 420 (according to build-on)					
Maximum pressure ports Y**	bar	(according to build-on)					
Max. Flow @10 bar delta-p (w/o damping nose)*	Lpm	320	800	1300	2200	2800	4600
Max. Flow @10 bar delta-p (with damping nose)*	Lpm	300	600	1000	1750	2300	3400

Part Number	Description	Max. Quantity	Shipment (Business Days)
R900941241	LC 25 A05E7X/V	3	10 day(s)
R900906337	LC 32 A20E7X/	5	10 day(s)
R900937999	LC 40 A20D7X/	3	10 day(s)
R900927973	LC 40 A40E7X/	5	10 day(s)
R901329019	LC2A 050 A40D-1X/Z2F	3	10 day(s)
R900617372	LFA 25 EWB-7X/CA10DQMG24/12	3	10 day(s)
R900977668	LFA 25 EWMA-7X/CA20DQMG24P10T10/12	3	10 day(s)
R900912712	LFA 32 WEA-7X/	3	10 day(s)
R900938107	LFA 40 E-7X/CA40DQMG24F	3	10 day(s)

GoTo Focused Delivery Program: Directional Valves

LC + LFA - Logic valves for pressure functions

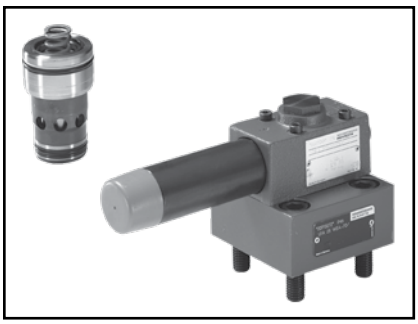

Logic valves consist of a cartridge (LC) and cover (LFA) which are ordered separately. The LC..DB is a pressure relief cartridge. Cracking pressure is determined by spring code (ex: 40 = 4 bar). The LC without damping nose has option E. The LC with damping nose has option D. The LFA for pressure functions have many configuration. LFA..DB includes a manual relief valve. LFA..DBEM has mounting provision for a proportional relief valve. The standard LFA includes metric fasteners.

For complete engineering and design information: ***GoTo www.boschrexroth-us.com/GoToDirectional***

Features

- Sizes 16, 25, 32, 40
- Mounting cavity and connections to DIN ISO 7368
- LC has optional damping nose
- Control cover with DB relief cartridge
- Control cover for mounting DBET proportional relief valve
- Detailed information: RA21050 (LC..DB)

Technical Data

Size		16	25	32	40
Maximum pressure LC without pilot valve	bar	420			
Pressure limit, determined by pilot valve	bar	50, 100, 200, 315, 350, 420			
Maximum Flow (w/o damping nose E)	Lpm	300	450	600	1000
Maximum Flow (with damping nose D)	Lpm	175	300	450	700

Part Number	Description	Max. Quantity	Shipment (Business Days)
RR900912549	LC 25 DB20E7X/	5	10 day(s)
R900912543	LC 32 DB20E7X/	5	10 day(s)
R900932360	LFA 25 DBW2-7X/200/12	5	10 day(s)

GoTo Focused Delivery Program: Directional Valves

5-WE - Directional Spool Valves

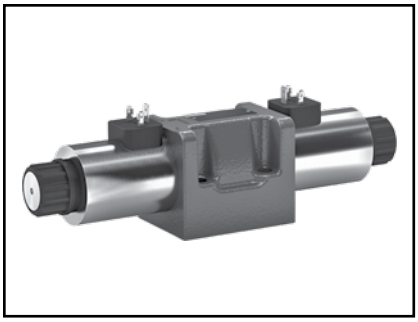

The 5-chamber directional valve type 5-.WE is a solenoid operated directional spool valve influencing the switching time. It controls the start, stop and direction of a flow. Directional spool valves connect or isolate the connections by moving a control spool in a housing bore.

For complete engineering and design information: ***GoTo www.boschrexroth-us.com/GoToDirectional***

Features

- Size 10
- Porting pattern according to ISO 4401-05-04-0-05 and NFPA T3.5.1 R2-2002 D05
- Wet-pin DC solenoids with detachable coil
- Solenoid coil can be rotated by 90*
- Coil can be replaced without opening pressure tight chamber
- Single or double valve mating connectors (see RE08006)
- Detailed information: RE23352

Technical Data

Size			10
Version			Standard
Operating pressure	p_{max}	bar (PSI)	420 (6000)
Flow	$q_{v\ nom}$	l/min (GPM)	150 (39.6)

Part Number	Description	Max. Quantity	Shipment (Business Days)
R901337328	5-4WE 10 D5X/EG24N9K4QMBG24/M	3	10 day(s)
R901334064	5-4WE 10 EB5X/EG24N9K4QMBG24/M	3	10 day(s)
R901349492	5-4WE 10 Y5X/EG24N9K4QMAG24/M	3	10 day(s)

GoTo Focused Delivery Program: Directional Valves

3WRCBH - Directional High-Response Cartridge Valves, pilot operated

In connection with pilot control valves, valves of type 3WRCBH are pilot-operated directional high-response cartridge valves with 2 control edges in servo quality, P–A / A–T. They control size and direction of a flow.

For complete engineering and design information: ***GoTo www.boschrexroth-us.com/GoToDirectional***

Features

- Size 50
- Component series 1X
- Maximum operating pressure 315 bar
- Maximum flow 2250 l/min
- Detailed information: RE29217

Technical Data

Size		NG	25		32	50		
Installation position			Horizontal or position transducer downwards					
Ambient temperature range		°C	–20 ... +50					
Mass		kg	3.9		5.6	14.7		
Vibration resistance, test condition			max. 25 g, room vibration test in all directions (24h)					
Max. operating pressure	▶ Port P, A, T, X, Z	bar	315					
Min. pilot pressure		bar	pA + 4					
Rated flow (Δp = 5 bar/control edge)		l/min	65	190	380	300	750	
Maximum flow		l/min	350	570	820	1600		
Pilot flow		l/min	8		16	28		
Leakage flow (at 100 bar)	▶ Pilot control valve	cm^3/min	<300		<500	<900		
	▶ Main stage	cm^3/min	<350	<350	<500	<500	<600	
Hydraulic fluid temperature range		°C	–20 ... +80					
Viscosity range	▶ Recommended	mm^2/s	20 ... 100					
	▶ Maximum admissible	mm^2/s	10 ... 800					
Manufacturing tolerance q_{Vmax}		%	≤10					
Actuating time	▶ A–X	ms	33		28	60		
	▶ A–X; B–Z	ms	27		–	50		

Part Number	Description	Max. Quantity	Shipment (Business Days)
0811402646	3WRCBH 50 VF750M-1X/M	3	10

GoTo Focused Delivery Program: Pressure Control Valves

DBD - Pressure Relief Valves

The DBD pressure relief valves are direct operated type relief valves. They are used to limit the pressure in a hydraulic system. DBD type relief valves offer line contact sealing for minimal leakage at closure and a full array of pressure capacities are available.

For complete engineering and design information: ***GoTo www.boschrexroth-us.com/gotopressure***

Features

- Sizes 6
- For threaded connection (“G”)
- As cartridge valve (“K”)
- Optional adjustment types: screw with hexagon socket and protective cap
- Optional adjustment types: rotary knob / hand wheel

Technical Data

Size			6	10	20
Version			“G, K”	“G, K”	“G, K”
Operating pressure	p_{max}	bar (PSI)	100 (1450) 400 (5800)	100 (1450) 630 (9150)	400 (5800)
Flow	$q_{V\ max}$	l/min (GPM)	50 (13)	120 (32)	250 (66)
Version “G” port size	SAE		–4; 7/16-20	–8; 3/4-16	–16; 1-5/6-12

Part Number	Description	Max. Quantity	Shipment (Business Days)
R900345310	DBDH 6 G1X/200/12	5	10 day(s)
R900458278	DBDH 6 G1X/315/12	5	10 day(s)
R900385305	DBDH 6 G1X/400/12	5	10 day(s)
R901250064	DBDH 6 G1X/400/12 SO147	5	10 day(s)

GoTo Focused Delivery Program: Pressure Control Valves

ZDB & Z2DB - Pressure Relief Valves

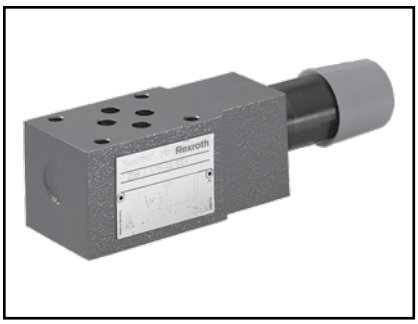

Pressure relief valve types ZDB and Z2DB are pilot sandwich type pressure controls. ZDB versions offer single port pressure control, while Z2DB models offer dual port pressure control. Z2DB models can be configured as either port relief or cross port relief. The ZDB program offers multiple spring options.

For complete engineering and design information: ***GoTo www.boschrexroth-us.com/gotopressure***

Features

- Sizes 6
- For size 6 mounting: porting pattern according to ISO 4401-3, NFPA T3.5.1M R1, and ANSI B93.7 D 03
- For size 10 mounting: porting pattern according to ISO 4401-5, NFPA T3.5.1M R1, and ANSI B93.7 D05
- Four pressure ratings: 50 bar (725 PSI), 100 bar (1450 PSI), 200 bar (2900 PSI), and 315 bar (4600 PSI)
- Five pressure relief functions: A -> T; P -> T; B -> T; A -> T as well as A+B -> T; A -> B and B -> A
- Adjustment type: rotary knob with scale

Technical Data

ZDB & Z2DB		Size	6	10
Operating pressure	p_{max}	bar (PSI)	315 (4600)	350 (4600)
Flow	$q_{V\ max}$	l/min (GPM)	60 (15.9)	100 (26.4)

Part Number	Description	Max. Quantity	Shipment (Business Days)
R900411312	Z2DB 6 VC2-4X/200V	5	10 day(s)
R900409898	ZDB 6 VP2-4X/315V	5	10 day(s)

GoTo Focused Delivery Program: Pressure Control Valves

DBW - Pressure Relief Valves

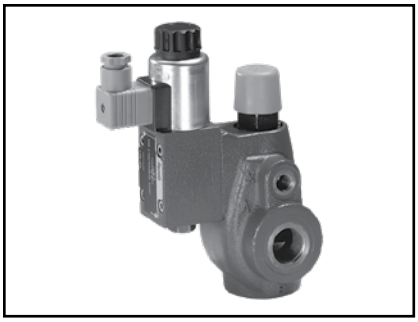

Pressure control valves of type DB are pilot operated pressure relief valves. They are used for the limitation of the operating pressure. Pressure relief valves basically consist of a main valve with main spool insert and pilot valve with pressure adjustment element.

For complete engineering and design information: ***GoTo www.boschrexroth-us.com/gotopressure***

Features

- Sizes 10, 20 & 30
- For mounting: porting pattern according to ISO 6264-AT-10-2-A

Technical Data

Size			10	20	30
Operating pressure	p_{max}	bar (PSI)	350 (5100)	350 (5100)	350 (5100)
Flow	$q_{V\ max}$	l/min (GPM)	250 (66)	500 (132)	650 (172)

Part Number	Description	Max. Quantity	Shipment (Business Days)
R900720169	DBW 20 BG1-4X/315-6EG24N9K4/12 W65	5	10 day(s)

GoTo Focused Delivery Program: Pressure Control Valves

ZDR - Pressure-Reducing Valves

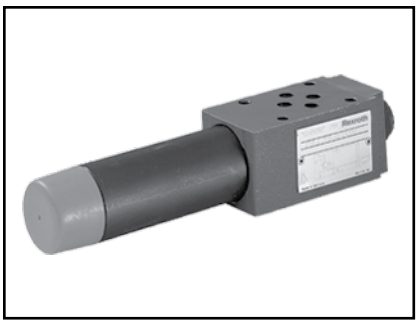

Models ZDR are 3-way direct operated pressure reducing-relieving valves. They maintain a “reduced” pressure in a branch circuit and permit “relieving” pressure spike occurrences in the reduced branch circuit. Options for pressure ranges and operator adjustment options are within the scope of the modular reducing valve portfolio.

For complete engineering and design information: ***GoTo www.boschrexroth-us.com/gotopressure***

Features

- Sizes 6 and 10
- For size 6 mounting: porting pattern according to ISO 4401-3, NFPA T3.5.1M Ra, and ANSI B93.7 D 03
- For size 10 mounting: porting pattern according to ISO 4401-05, NFPA T3.5.1M R1, and ANSI B93.7 D 05
- Pressure reduction in channel A, B or P
- Four pressure ratings: 25 bar (360 PSI), 75 bar (1100 PSI), 150 bar (2175 PSI), 210 bar (3050 PSI)
- Adjustment type: rotary knob
- Check valve, optional

Technical Data

ZDR		Size	6	10
Component series			4X	5X
Operating pressure	p_{max}	bar (PSI)	210 (3050)	210 (3050)
Flow	$q_{V\ max}$	l/min (GPM)	50 (13.2)	80 (21.1)

Part Number	Description	Max. Quantity	Shipment (Business Days)
R900483787	ZDR 6 DP2-4X/150YM	5	10 day(s)
R900404754	ZDR 6 DP2-4X/150YM/12	5	10 day(s)
R900433350	ZDR 6 DP2-4X/210YM/12	5	10 day(s)
R900483786	ZDR 6 DP2-4X/75YM	5	10 day(s)
R900401216	ZDR 6 DP2-4X/75YM/12	5	10 day(s)
R900512452	ZDR 10 VP5-3X/200YM/12	5	10 day(s)

GoTo Focused Delivery Program: Flow Control Valves

Z2FS - Double Throttle Check Valves

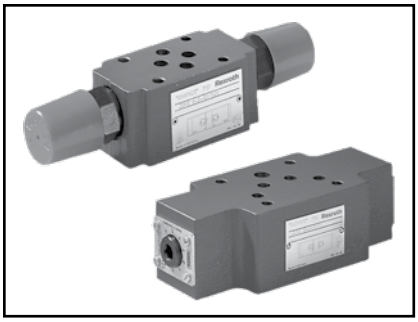

Flow control valves, Model Z2FS(K), are double throttle/check sandwich type valves. They restrict flow to or from actuator ports (A & B) of a directional valve. Two throttle/check valves, symmetrically arranged in the housing, restrict flow with adjustable throttles in one direction while providing free flow in the opposite direction.

For complete engineering and design information: ***GoTo www.boschrexroth-us.com/gotoflow***

Features

- Sizes 6 to 22
- For size 6 mounting: porting pattern according to ISO 4401-3, NFPA T3.5.1M R1, and ANSI B93.7 D 03
- For size 10 mounting: porting pattern according to ISO 4401-5, NFPA T3.5.1M R1, and ANSI B93.7 D 05
- For size 16 mounting: porting pattern according to ISO 4401-7, NFPA T3.5.1M R1, and ANSI B93.7 D 07
- For size 22 mounting: porting pattern according to ISO 4401-8, NFPA T3.5.1M R1, and ANSI B93.7 D 08
- For limiting the main or pilot flow of one or two actuators
- Meter-in or meter-out throttling
- Adjustment type: softscrew with locknut

Technical Data

Z2FS		Size	6	10	16	22
Operating pressure	p_{max}	bar (PSI)	315 (4600)	315 (4600)	350 (5100)	350 (5100)
Flow	$q_{v\ nom}$	l/min (GPM)	80 (21)	160 (42)	250 (66)	360 (95)

Z2FSK		Size	6	10
Operating pressure	p_{max}	bar (PSI)	210 (3000)	210 (3000)
Flow	$q_{v\ nom}$	l/min (GPM)	40 (10.5)	80 (21)

Part Number	Description	Max. Quantity	Shipment (Business Days)
R900517812	Z2FS 10-5-3X/V	5	10 day(s)
R900468786	Z2FS 22-8-3X/S2V	5	10 day(s)
R900474580	Z2FS 22-8-3X/SV	5	10 day(s)
R900481621	Z2FS 6-2-4X/1Q	5	10 day(s)
R900481623	Z2FS 6-2-4X/1QV	5	10 day(s)
R900481624	Z2FS 6-2-4X/2QV	5	10 day(s)

GoTo Focused Delivery Program: Flow Control Valves

2FRM - 2-Way Flow Control Valves

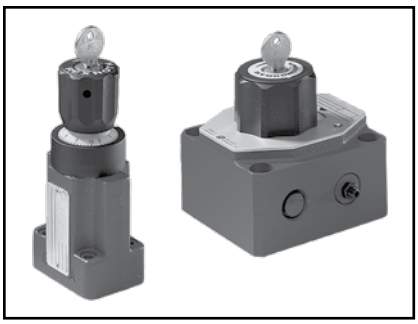

Pressure compensated flow controls Model 2FRM are two-way restrictive-style flow regulators. They accurately control flow, independent of changes in fluid viscosity or pressure drop across the valve. This valve maintains a constant actuator speed independent of changes in load induced pressure. Sharp edged throttle openings reduce the influence of flow variations from temperature change.

For complete engineering and design information: ***GoTo www.boschrexroth-us.com/gotoflow***

Features

- Sizes 6, 10 and 16
- For size 6 subplate mounting: porting pattern according to ISO 6263-03 and NFPA T3.5.1M R1 2 FO 3
- For size 10 subplate mounting: porting pattern according to ISO 6263-06-2 and NFPA T3.5.1M R1 2 FO 6
- For size 16 subplate mounting: porting pattern according to ISO 6263-07-2 and NFPA T3.5.1M R1 2 FO 7
- Manual dial adjustment
- With external closure of the pressure compensator, optional (size 6)
- Check valve, optional (size 6)
- Pressure compensator stroke limitation for reducing start-up jumps, optional (size 10)

Technical Data

Size			6	10	16
Operating pressure [1]	p_{max}	bar (PSI)	315 (4600)	315 (4600)	315 (4600)
Pilot pressure	p_{St}	bar (PSI)	–	315 (4600)	315 (4600)
Flow	$q_{V\,max}$	l/min (GPM)	32 (8.45)	50 (13.21)	160 (42.27)

Part Number	Description	Max. Quantity	Shipment (Business Days)
R900205507	2FRM 6 B36-3X/1,5QRV	5	10 day(s)
R900205510	2FRM 6 B36-3X/16QMV	5	10 day(s)

GoTo Focused Delivery Program: Proportional Valves

4WRA & 4WRAE - Proportional Directional Valves

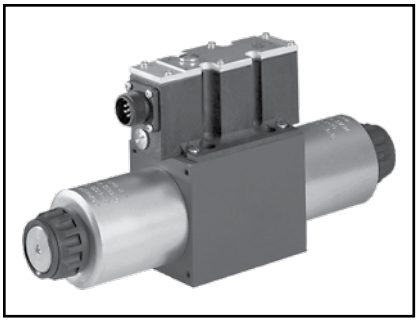

The 4WRA(E) direct operated proportional valve with integral feedback is available with or without on-board electronics (OBE). Individual valve amplifiers are available for the non-OBE version. Postive overlap spools reduce leakage at center and OBE models can be configured to either a voltage or current command.

For complete engineering and design information: ***GoTo www.boschrexroth-us.com/GoTopumps***

Features

- Sizes 6 and 10
- For size 6 subplate mounting: porting pattern according to ISO 4401-3, NFPA T3.5.1M R1, and ANSI B 93.7 D 03
- For size 10 subplate mounting: Porting pattern according to ISO 4401-5, NFPA T3.5.1M R1, and ANSI B93.7 D 05
- Control of the direction and magnitude of a flow
- Proportional solenoid operation
- Spring-centered control spool
- Different spool overlaps possible
- Integral electronics (OBE) for type 4WRAE

Technical Data

Size				6	10
Operating pressure	Ports A, B, P	p_{max}	bar (PSI)	315 (4600)	315 (4600)
Nominal flow	Δp = 10 bar (145 PSI)	$q_{V\ nom}$	l/min (GPM)	7, 15, 30 (1.8, 4, 8)	30, 60 (8, 16)
Maximum hysteresis			%	5	5
Step response	0 to 90 %	T_u+T_g	ms	< 40	< 140
Operating voltage	OBE	U	V	24	24
Comm. value signal	OBE	U	V	0 to 10 / ±10	0 to 10 / ±10
		I	mA	4 to 20	4 to 20
Control electronics	Type 4WRA	Card, analog		VT-VSPA2-1	
		Card, digital		VT-VSPD-1	
		Module, analog		VT-MSPA2-1	

Part Number	Description	Max. Quantity	Shipment (Business Days)
R900902097	4WRA 10 E60-2X/G24N9K4/V	5	10 day(s)
R900907650	4WRA 10 W60-2X/G24N9K4/V	5	10 day(s)
R900902940	4WRA 6 E30-2X/G24N9K4/V	5	10 day(s)
R900558356	4WRAE 10 E60-2X/G24N9K31/A1V	5	10 day(s)
R900900988	4WRAE 10 W60-2X/G24N9K31/A1V	5	10 day(s)
R900909389	4WRAE 6 E15-2X/G24N9K31/A1V	5	10 day(s)
R900558355	4WRAE 6 E30-2X/G24N9K31/A1V	5	10 day(s)
R900900987	4WRAE 6 W30-2X/G24N9K31/A1V	5	10 day(s)

GoTo Focused Delivery Program: Proportional Valves

4WRA(E)B - Proportional Directional Valves

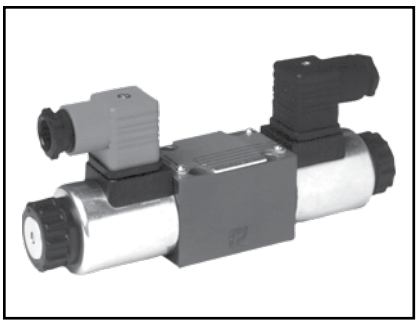

4WRAB6 type direct operated proportional valves are available with or without on-board electronics (OBE). Suitable for open loop applications, the WRAB6 does not have integral feedback; however, provides proportional flow output dependant on a commanded value. The WRAB6 may also be used with a DC switching signal, if the application requires throttled shifting without full proportional control.

For complete engineering and design information: ***GoTo www.boschrexroth-us.com/GoTopumps***

Features

- Size 6
- Direct operated proportional directional control valves, which control both the direction and volume of a fluid flow
- Mounts on standard ISO 4401-3, NFPA T3.5.1MR1 D 03 and ANSI B 93.7 D 03 interface
- Two piece solenoid design with removable coils
- Integrated electronics available
- For subplates, see RE 45 052

Technical Data

Size				6
Operating pressure	Ports A, B, P	p_{max}	bar (PSI)	350 (5100)
	Port T	p_{max}	bar (PSI)	210 (3100)
Maximum flow			l/min (GPM)	30 (8)
Maximum hysteresis			%	3.5
Step response	0 to 100%	$T_u + T_g$	ms	40
Supply voltage		U	vdc	12V (±10%)
Associated electronic amplifier cards (some restrictions apply)				MDSD*

* The MDSD1 or MDSD will operate the 4 WRA B../G12 with 14 to 28 vdc from the power supply. The MDSD can be used with 10 to 14 vdc power, but valve performance may be affected. At higher temperatures, increased solenoid resistance may reduce the available flow. An amplifier is not required when using the 4 WRA B../G12 as a non-proportional (switching) valve at 12 vdc ±10%.

Part Number	Description	Max. Quantity	Shipment (Business Days)
R978879705	4WRAB6E12-1X/G12N9K4/MR	5	10 day(s)
R978898190	4WRAB6E25-1X/G12N9K4/MR	5	10 day(s)
R978909814	4WRAB6W12-1X/G24N9K4/MR	3	10 day(s)
R978877472	4WRAB6W25-1X/G12N9K4/MR	5	10 day(s)
R978878558	4WRAEB6E25-1X/G24N9DK26/MR	5	10 day(s)
R978878559	4WRAEB6W25-1X/G24N9DK26/MR	5	10 day(s)

GoTo Focused Delivery Program: Proportional Valves

4WREE - Proportional Directional Valves

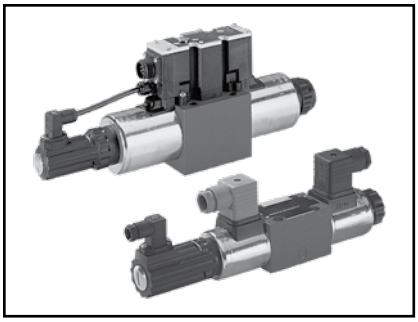

WRE(E) direct operated proportional directional control with integral feedback are available with or without on-board electronics (OBE). Positive overlap spools reduce leakage at center, while underlap spools can be utilized for closed-loop functions. Individual amplifiers are available, while OBE models are possible with either a voltage or current command.

For complete engineering and design information: ***GoTo www.boschrexroth-us.com/GoTopumps***

Features

- Sizes 6 to 10
- For size 6 mounting: porting pattern according to ISO 4401-3, NFPA T3.5.1M R1, and ANSI B 93.7 D 03
- For size 10 mounting: porting pattern according to ISO 4401-5, NFPA T3.5.1M R1, and ANSI B93.7 D 05
- Control of the direction and magnitude of a flow
- Proportional solenoid operation
- Spring-centered control spool
- Different spool overlaps possible
- Integrated control electronics (OBE) for type 4WREE

Technical Data

Size				6	10
Operating pressure	Ports A, B, P	p_{max}	bar (PSI)	315 (4600)	315 (4600)
Nominal flow	Δp = 10 bar(145 PSI)	$q_{v\ nom}$	l/min (GPM)	8, 16, 32 (2.1, 4.2, 8.5)	25, 50, 75 (6.6, 13.2, 19.8)
Maximum hysteresis			%	0.1	0.1
Step response	0 to 90%	$T_u + T_g$	ms	20	40
Operating voltage		U	V	24	24
Comm. value signal (alternative)	Type 4WREE	U	V	±10	±10
		I	mA	4 to 20	4 to 20

Part Number	Description	Max. Quantity	Shipment (Business Days)
R900954092	4WRE 6 E16-2X/G24K4/V	5	10 day(s)
R900927231	4WREE 10 E50-2X/G24K31/A1V	5	10 day(s)
R900927230	4WREE 10 E75-2X/G24K31/A1V	5	10 day(s)
R900927235	4WREE 10 V50-2X/G24K31/A1V	5	10 day(s)
R900924607	4WREE 10 V75-2X/G24K31/A1V	5	10 day(s)
R900931371	4WREE 10 W50-2X/G24K31/A1V	5	10 day(s)
R900927233	4WREE 10 W75-2X/G24K31/A1V	5	10 day(s)
R900912156	4WREE 6 E08-2X/G24K31/A1V	5	10 day(s)
R900920567	4WREE 6 E16-2X/G24K31/A1V	5	10 day(s)
R900907114	4WREE 6 E32-2X/G24K31/A1V	5	10 day(s)
R900913433	4WREE 6 EA16-2X/G24K31/A1V	5	10 day(s)
R900909367	4WREE 6 V08-2X/G24K31/A1V	5	10 day(s)
R900931195	4WREE 6 V1-16-2X/G24K31/A1V	5	10 day(s)
R900907440	4WREE 6 V16-2X/G24K31/A1V	5	10 day(s)
R900911681	4WREE 6 V32-2X/G24K31/A1V	5	10 day(s)
R900923000	4WREE 6 W08-2X/G24K31/A1V	5	10 day(s)
R900925657	4WREE 6 W16-2X/G24K31/A1V	5	10 day(s)
R900911004	4WREE 6 W32-2X/G24K31/A1V	5	10 day(s)

GoTo Focused Delivery Program: Proportional Valves

4WRZE - Proportional Directional Valves

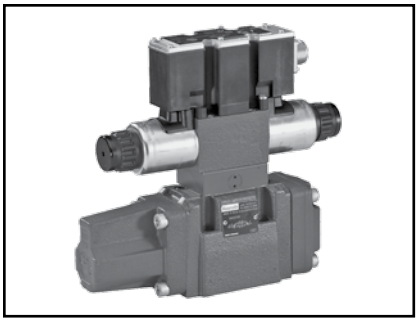

Valves of type 4WRZE are pilot operated 4-way directional valves with operation by proportional solenoids. They control the direction and magnitude of flow.

For complete engineering and design information: ***GoTo www.boschrexroth-us.com/GoTopumps***

Features

- Sizes 16
- Pilot operated 2-stage proportional directional valves with integrated electronics (OBE)
- Control the direction and magnitude of flow
- Manual override
- Spring-centered control spool

Technical Data

Size			16
Operating pressure		bar (PSI)	up to 350 (5100)
Return flow pressure	– Port T (Port R) (external pilot oil drain)	bar (PSI)	up to 250 (3600)
	– Port T (internal pilot oil drain)	bar (PSI)	up to 30 (1300)
	– Port Y	bar (PSI)	up to 30 (1300)
Flow of the main valve		l/min (GPM)	up to 460 (121.5)

Part Number	Description	Max. Quantity	Shipment (Business Days)
R901263889	4WRZ 16 E150-7X/6EG24N9ETK4/D3M-674	3	10 day(s)
R900946595	4WRZ 16 W6-150-7X/6EG24N9ETK4/V	3	10 day(s)
R900944187	4WRZ 25 W6-325-7X/6EG24N9K4/V	3	10 day(s)
R900945995	4WRZE 16 E150-7X/6EG24N9ETK31/A1V	3	10 day(s)

GoTo Focused Delivery Program: Proportional Valves

4WRPE - Proportional Directional Valves (Series 2X)

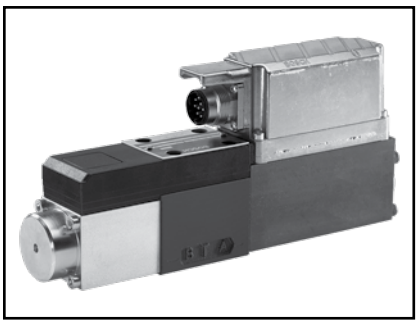

The 4/3 proportional valves are directly controlled components of subplate mounting design. They are actuated by proportional solenoids with an integrated linear feedback to assure accurate positioning related to a command signal. The valves are available with integrated valve electronics.

For complete engineering and design information: ***GoTo www.boschrexroth-us.com/GoTopumps***

Features

- Sizes 6
- For size 6 subplate mounting: porting pattern according to ISO 4401-3, NFPA T3.5.1M R1, and ANSI B 93.7 D 03
- Control of the direction and magnitude of a flow
- Position sensing of the control spool via an inductive position transducer
- Detailed information: RE29025

Technical Data

Size				6
Operating pressure		p_{max}	bar (PSI)	315 (4600)
Nominal flow	Δp = 10 bar (145 PSI)	$q_{V\ nom}$	l/min (GPM)	8 to 32 (2.1 to 8.45)
Maximum hysteresis			%	≤0.3
Operating voltage	OBE	U	V	24
Comm. value signal	OBE	U	V	0 to ±10

Part Number	Description	Max. Quantity	Shipment (Business Days)
0811404141	4WRPE 6 E32SJ-2X/G24K0/A1M	5	10 day(s)

GoTo Focused Delivery Program: Proportional Valves

4WRPE - High-Response Directional Valves (Series 3X)

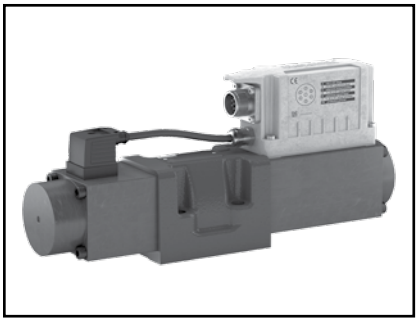

4WRPE10 Series 3X is high performance, direct operated, proportional valve. It is suitable for demanding open loop and closed loop applications like position, velocity, and pressure control. It is even more robust than the previous design.

For complete engineering and design information: ***GoTo www.boschrexroth-us.com/GoTopumps***

Features

- Size 10
- Nominal flow at 10 bar drop: 50 to 80 Lpm
- Spool in housing
- Direct operated by onboard electronic soleniods
- Standard 7-pin connector
- Mounts on ISO 4401-3, ANSI B93.8 D03
- Detailed information: RE29122

Technical Data

Size				10
Operating pressure	Ports P, A, B	p_{max}	bar (PSI)	350 (5000)
Nominal flow	Δp = 70 bar (1000 PSI)	$q_{V\ max}$	l/min (GPM)	50, 80
Maximum hysteresis			%	< 0.25
Response sensitivity			%	< 0.05
Frequency response	Phase response −90°	f	V	45
Operating voltage	OBE	*U*	V	24
Command value signal	OBE	*U*	V	±10
		I	mA	4 to 20
Ambient temperature		T	°C	−20 to +60

Part Number	Description	Max. Quantity	Shipment (Business Days)
R901396513	4WRPE 10 E50SJ-3X/M/24A1	3	10 day(s)
R901396520	4WRPE 10 EA80SJ-3X/M/24A1	3	10 day(s)
R901401546	4WRPE 10 V50S-3X/M/24A1	3	10 day(s)
R901392641	4WRPE 10 V80S-3X/M/24A1	5	10 day(s)
R901396519	4WRPE 10 W6-80SJ-3X/M/24A1	3	10 day(s)

GoTo Focused Delivery Program: Proportional Valves

4WRPH & 4WRPEH - High-Response Directional Valves (Series 2X)

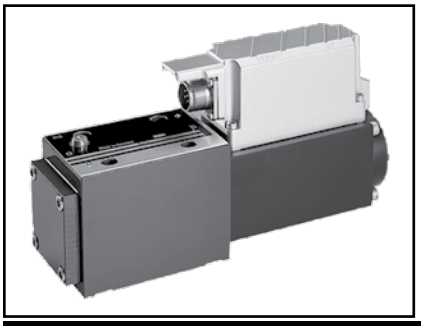

4WRPH and 4WRPEH type proportional directional valves offer fast response, minimal hysteresis, and are excellent performers in closed loop applications. Available with or without on-board electronics, these valves may be used in a variety of applications and environments. The robust design is also applicable to circuits where vibration may be a concern.

For complete engineering and design information: ***GoTo www.boschrexroth-us.com/GoTopumps***

Features

- Sizes 6 and 10
- For size 6 subplate mounting: porting pattern according to ISO 4401-3, NFPA T3.5.1M R1, and ANSI B 93.7 D 03
- For size 10 subplate mounting: porting pattern according to ISO 4401-5, NFPA T3.5.1M R1, and ANSI B93.7 D 05
- Control of the direction and magnitude of a flow
- Use for position, velocity and pressure control
- Actuation through control solenoid
- Position sensing of the control spool via an inductive position transducer
- Characteristic curves with and without inflection
- Spool and sleeve in servo-type quality
- Integral electronics (OBE) for type 4WRPEH
- Detailed information: 4WRPH (size 6) RE29028 & 4WRPH (size 10) RE29032 ; 4WRPEH (size 10) RE29037

Technical Data

Size				6	10
Operating pressure		p_{max}	bar (PSI)	315 (4500)	315 (4500)
Nominal flow	$\Delta p = 70$ bar (1000 PSI)	$q_{V\ nom}$	l/min (GPM)	2 to 40 (0.5 to 11)	50 to 100 (13 to 26)
Maximum hysteresis			%	<0.2	<0.2
Frequency	Phase response: −90 °	f	Hz	120	60
Operating voltage	OBE	*U*	V	24	24
Comm. value signal	OBE	*U*	V	0 to 10 / ±10	0 to 10 / ±10
		I	mA	4 to 20	4 to 20
Control electronics	Type 4WRPH		Card, analog	VT-VRRA1-527	VT-VRRA1-537

Part Number	Description	Max. Quantity	Shipment (Business Days)
0811404801	4WRPEH 10 C3 B100L-2X/G24K0/A1M	5	10 day(s)
0811404817	4WRPEH 10 C3 B100L-2X/G24K0/F1M	5	10 day(s)
0811404803	4WRPEH 10 C4 B100L-2X/G24K0/A1M	5	10 day(s)
0811404802	4WRPEH 10 C4 B50L-2X/G24K0/A1M	5	10 day(s)
0811404901	4WRPH 10 C1 B100L-2X/G24K0/M-750	3	10 day(s)
0811404034	4WRPH 6 C3 B12L-2X/G24Z4/M	5	10 day(s)
0811404047	4WRPH 6 C3 B15P-2X/G24Z4/M	5	10 day(s)
0811404036	4WRPH 6 C3 B40L-2X/G24Z4/M	5	10 day(s)
0811404037	4WRPH 6 C4 B12L-2X/G24Z4/M	3	10 day(s)

GoTo Focused Delivery Program: Proportional Valves

4WRPEH - High-Response Directional Valves (Series 3X)

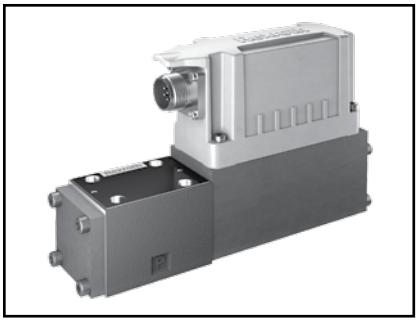

4WRPEH 6 is a high performance, direct operated, servo-solenoid valve. It is suitable for closed loop applications like position, velocity, and pressure control. It is even more robust than the previous design. Series-3X is not designed for pilot operated applications, 3WRCBH, or 4WRLE.

For complete engineering and design information: ***GoTo www.boschrexroth-us.com/GoTopumps***

Features

- Size 6
- Nominal flow at 70 bar drop: 4 to 40 Lpm
- Precise sleeve and spool
- Fail-safe position of control spool in off condition
- Direct operated by onboard electronic solenoid
- Standard 7-pin connector
- Mounts on ISO 4401-3, ANSI B93.8 D03
- Detailed information: RE29121

Technical Data

Size				6
Operating Pressure		p_{max}	bar (PSI)	350 (5000)
Nominal flow	Δp = 70 bar (1000 PSI)	$q_{V\ nom}$	l/min (GPM)	4 to 40 (1.06 to 10.57)
Maximum hysteresis			%	< 0.1
Response sensitivity			%	< 0.05
Frequency response	Phase response: −90°	f	Hz	120
Operating voltage	OBE	*U*	V	24
Command value signal	OBE	*U*	V	±10
		I	mA	4 to 20

Part Number	Description	Max. Quantity	Shipment (Business Days)
R901382345	4WRPEH 6 C3 B04L-3X/M/24A1	5	10 day(s)
R901382312	4WRPEH 6 C3 B12L-3X/M/24A1	5	10 day(s)
R901382323	4WRPEH 6 C3 B15P-3X/M/24A1	5	10 day(s)
R901382313	4WRPEH 6 C3 B24L-3X/M/24A1	5	10 day(s)
R901382315	4WRPEH 6 C3 B40L-3X/M/24A1	5	10 day(s)
R901382350	4WRPEH 6 C3 B40L-3X/M/24F1	5	10 day(s)
R901382318	4WRPEH 6 C4 B12L-3X/M/24A1	5	10 day(s)
R901382346	4WRPEH 6 C4 B24L-3X/M/24A1	5	10 day(s)
R901382319	4WRPEH 6 C4 B40L-3X/M/24A1	5	10 day(s)

GoTo Focused Delivery Program: Proportional Valves

4WRLE - High-Response Directional Valves (Series 4X)

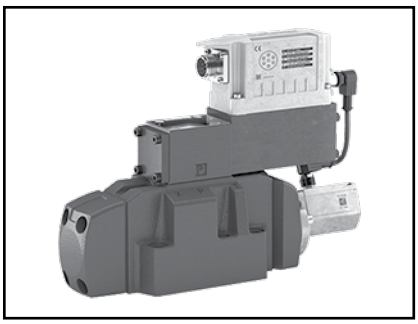

Pilot operated, proportional directional valves type 4WRLE are high response control valves with spool position feedback. The series 4X has a new on-board electronics (OBE) that improves performance and reliability. It has an increased temperature range, and it's even more robust to mechanical shock and vibration. The optimized spool and housing allow higher nominal flow ratings in all sizes. The improved dynamic response is well suited for a wide range of demanding closed loop applications, involving pressure, force, position, and velocity control.

For complete engineering and design information: ***GoTo www.boschrexroth-us.com/GoToProportional***

Features

- Size 10 to 25
- Higher nominal flows per size, 60 to 400 Lpm
- Maximum pressure to 350 bar
- Improved dynamic performance and stability
- Even more robust onboard electronics
- Porting pattern according to ISO 4401-05, 07, 08
- Detailed information: RE29123

Technical Data

Size				10	16	25
Nominal flow	$\Delta p = 10$ bar (145 psi)	$q_{v\ nom}$	lpm (gpm)	60, 100 (16, 26)	150, 250 (40, 66)	400 (106)
Maximum flow		$q_{v\ max}$	lpm (gpm)	300 (79)	800 (211)	1250 (330)
Phase response @ −90 degrees	(signal ±100% to ±1%)	f	Hz	28 to 65	26 to 62	22 to 60
Max. Operating Pressure		p_{max}	bar (psi)	350 (5000)		
Hysteresis			%	< 0.1		

Part Number	Description	Max. Quantity	Shipment (Business Days)
R901477667	4WRLE 10 V100L-4X/MPT/24A1	3	10 day(s)
R901473285	4WRLE 16 V1-250L-4X/MPT/24A1	3	10 day(s)
R901404331	4WRLE 16 V250L-4X/MXY/24A1	3	10 day(s)
R901396318	4WRLE 25 E400LJ-4X/MXY/24A1	3	10 day(s)
R901404337	4WRLE 25 V400L-4X/MXY/24A1	3	10 day(s)
R901491104	4WRLE 25 W4-350SJ-4X/MPT/24A1-247	3	10 day(s)

GoTo Focused Delivery Program: Proportional Valves

5WRPE - High-Response Directional Valves

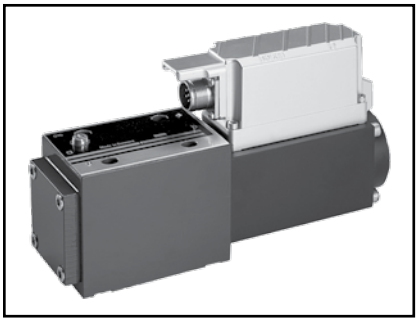

The 5WRPE 5/3 high-response directional control valve is a directly operated component. The valve is actuated by control solenoids with integral position feedback and on-board electronics. Electronics are factory calibrated.

For complete engineering and design information: ***GoTo www.boschrexroth-us.com/GoToProportional***

Features

- Size 10
- Directly operated servo solenoid valve, with 5/3-way symbol in servo quality
- Actuated on one side, A-T fail-safe position when switched off
- Suitable for electrohydraulic controllers in production and testing systems
- Mounts on standard ISO 4401-5, NFPA T3.5.1MR1 and ANSI B93.7 D 05 interface

Technical Data

Size				10
Operating pressure		Port P, A, B	bar (psi)	210 (3045)
		Port T	bar (psi)	50 (725)
Max permissible flow	$\Delta p = 11$ bar	$q_{V\ nom}$	L/min (GPM)	70 (18.49)
Maximum hysteresis			%	≤0.3

Part Number	Description	Max. Quantity	Shipment (Business Days)
0811402107	5WRPE 10 F1B 70L -2X/G24K0/A1M	5	10 day(s)

GoTo Focused Delivery Program: Proportional Valves

STW - Proportional Directional Valves, direct operated, with *pQ* functionality

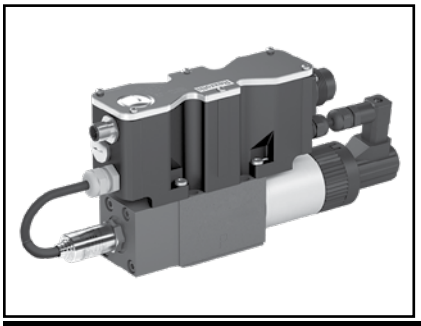

The STW valve is a proportional directional valve with field bus interface and integrated axis control. The built in pressure sensor and spool position feedback enables excellent control versatility by providing both pressure and flow control capabilities.

For complete engineering and design information: ***GoTo www.boschrexroth-us.com/GoToProportional***

Features

- Sizes 6 and 10
- 3-way proportional directional valve with integrated IAC-P digital control electronics
- Completely adjusted unit consisting of position-controlled valve, pressure sensor and field bus connection
- Operation via a proportional solenoid with central thread and detachable coil
- Valve spool, position-controlled
- Integrated pressure sensor plate (optional)
- ISO 4401 porting pattern
- Analog interfaces for command and actual values
- Design for CAN bus with DS 408 CANopen protocol or DP Profibus
- Quick commissioning via PC and WINPED commissioning software
- Detailed information: RE29014

Technical Data

Operating pressure	▶ Ports P, A, B (with sensor)	“3”	bar	50
		“5”	bar	160
		“8”	bar	250
	▶ Port T (with sensor)	“3”	bar	50
		“5”	bar	160
		“8”	bar	210
Ambient temperature range			°C	-20 ... +50
Storage temperature range			°C	-20 ... +80

Part Number	Description	Max. Quantity	Shipment (Business Days)
R900705778	STW 0196-1X/1V5-24CF6	3	10 day(s)

GoTo Focused Delivery Program: Proportional Valves

2WFCE - Proportional Flow Control Valves

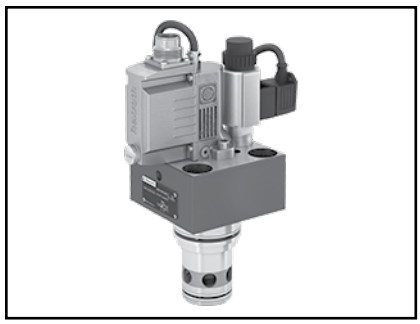

2WFCE is a DIN cavity, pilot operated proportional throttle valve with on-board electronics (OBE). When compared to its predecessor FESXE, maximum flow has increased in all sizes, with improved response and stability. The 2WFCE model A1 (10 vdc) can easily replace most FESXE (7-pin connector). FEE and FESE use 12-pin connectors. See data sheet for wiring changes or 12-pin connector options.

For complete engineering and design information: ***GoTo www.boschrexroth-us.com/gotoproportional***

Features

- Size 16 to 50
- Nominal flow 1500 Lpm @ 5 bar Δp
- Pilot operated
- 420 bar
- Improved performance and stability
- Bi-directional flow (x port to inlet)
- Detailed information: RE26871

Technical Data

Size				16	25	32	40	50
Nominal flow	Δp = 5 bar (73 psi)	$q_{v\ nom}$	lpm (gpm)	160 (42)	330 (87)	650 (172)	940 (248)	1500 (396)
Flow	Δp = 20 bar (290 psi)	$q_{v\ max}$	lpm (gpm)	320 (85)	620 (164)	1270 (336)	1850 (489)	see curve
Phase response @ –90 degrees	approx.	f	Hz	10	12	10	11	6.5
Max. Operating Pressure		p_{max}	bar (psi)	420 (6090)				
Hysteresis			%	< 0.2				
Response Sensitivity			%	< 0.1				

Part Number	Description	Max. Quantity	Shipment (Business Days)
R901436213	2WFCE 25 S330L-1X/M/24A1	3	10 day(s)
R901388128	2WFCE 40 S500L-1X/M/24A1	3	10 day(s)
R901388132	2WFCE 50 S1000L-1X/M/24A1	3	10 day(s)

GoTo Focused Delivery Program: Proportional Valves

DBE6X - Proportional Pressure Relief Valves

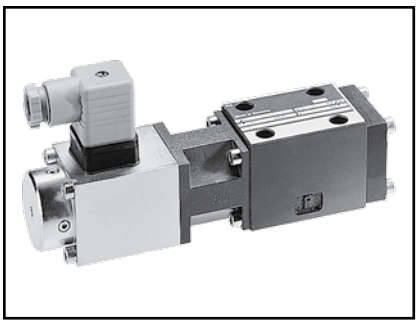

Type DBE6X proportional pressure relief valves are pilot operated pressure relief valves. The valves are actuated by means of a proportional solenoid. With these valves, the system pressure that needs to be limited can be infinitely adjusted in relation to the solenoid current.

For complete engineering and design information: ***GoTo www.boschrexroth-us.com/GoToProportional***

Features

- Size 6
- Pilot operated valves (pilot valves) for limiting system pressure (pilot oil internal only)
- Adjustable by means of the solenoid current
- Solenoid versions Imax = 0.8 A
- Pressure limitation to a safe level even with faulty electronics (solenoid current I > Imax)
- For subplate attachment, mounting hole configuration to ISO 4401-03-02-0-94

Technical Data

Size			6
Maximum set pressure (at Q = 1 l/min [0.26 GPM])		bar (PSI)	315 (4600)
Minimum pressure (at Q = 1 l/min [0.26 GPM])		bar (PSI)	10 (145)
Maximum working pressure	Port P	bar (PSI)	315 (4600)
Maximum pressure	Port T	bar (PSI)	250 (3600)
Maximum flow		l/min (GPM)	40 (10.6)
Valve with solenoid type			0.8 A
Maximum solenoid current		I_{max}	0.8 A
Coil resistance R_{20}		Ω	22
Hysteresis		%	≤ 4

Part Number	Description	Max. Quantity	Shipment (Business Days)
0811402043	DBE 6X-1X/315G24-8NZ4M	5	10 day(s)

GoTo Focused Delivery Program: Proportional Valves

DBEE6 - Proportional Pressure Relief Valves

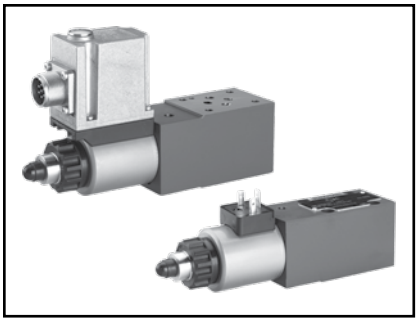

The pilot operated proportional pressure relief valves of the type DBEE are operated by means of a proportional solenoid. These valves are used to limit a system pressure. With these valves it is possible to steplessly adjust the system pressure to be limited depending on the electrical command value.

For complete engineering and design information: ***GoTo www.boschrexroth-us.com/GoToProportional***

Features

- Size 6
- Pilot operated valve for limiting a system pressure
- Operation by means of proportional solenoids
- Proportional solenoid with rotatable and detachable coil
- For subplate mounting or sandwich plate design: Porting pattern according to ISO 4401-03-02-0-05 and DIN 24340

Technical Data

Size			6
Maximum operating pressure	Port P; P1 – P2; A1 – A2; B1 – B2	bar (PSI)	350 (5100)
	Port T	bar (PSI)	50 (725)
Maximum setting pressure	Pressure rating 315 bar	bar (PSI)	315 (4600)
Maximum flow		l/min (GPM)	30 (7.9)
Hysteresis		%	±3 of the maximum setting pressure
Repeatability		%	< ±2 of the maximum setting pressure
Supply voltage	Nominal voltage	VDC	24
Inputs	Voltage	V	0 to 10

Part Number	Description	Max. Quantity	Shipment (Business Days)
R901323940	DBEE 6-2X/315G24K31A1M	5	10 day(s)

GoTo Focused Delivery Program: Proportional Valves

DBETX - Proportional Pressure Relief Valves

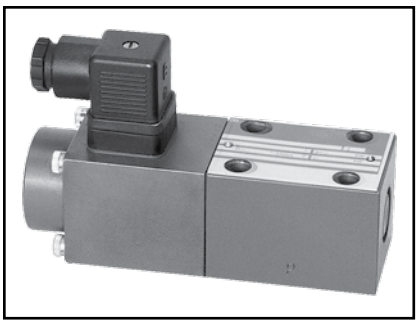

DBETX proportional pressure relief valves limit pressure for piloting applications. Pressure is limited by changing current to the proportional solenoid from an external amplifier.

For complete engineering and design information: ***GoTo www.boschrexroth-us.com/GoToProportional***

Features

- Size 6
- Porting pattern according to ISO 4401-3, NFPA T3.5.1M R, and ANSI B93.7 D 03
- Directly operated valves (pilot valves) for limiting system pressure
- Adjustable by means of the solenoid current
- Solenoid versions Imax = 0.8 A or Imax = 2.5 A
- Pressure limitation to a safe level even with faulty electronics (solenoid current I > Imax)

Technical Data

Size				6
Type				DBETX
Operating pressure	Port P	p_{max}	bar (PSI)	315 (4600)
	Port T	p_{max}	bar (PSI)	250 (3600)
Flow		$q_{V\ max}$	l/min (GPM)	1 (0.26)
Maximum hysteresis			%	≤ 4
Control electronics		Plug		VT-SSPA1-525 VT-SSPA1-508
		Module		VT-MSPA1-525 VT-MSPA1-508
		Card		VT-VSPA1-525 VT-VSPA1-508

Part Number	Description	Max. Quantity	Shipment (Business Days)
0811402017	DBETX-1X/180G24-8NZ4M	5	10 day(s)
0811402019	DBETX-1X/250G24-8NZ4M	5	10 day(s)

GoTo Focused Delivery Program: Proportional Valves

DBETA - Proportional Pressure Relief Valves

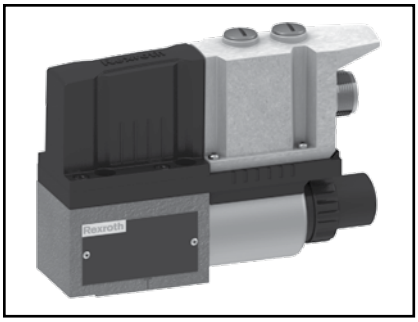

DBETA proportional pressure relief valves are for high performance applications up to 5 Lpm. Combine DBETA with logic valves (like LC + LFA.. DB) for high flow pressure circuits. Pilot remote pressure control on axial piston pumps (DRG control A4V, A10V, A15V).

For complete engineering and design information: ***GoTo www.boschrexroth-us.com/GoToProportional***

Features

- Size 6
- Nominal Pressure 200, 350 Bar
- Maximum Flow 5 Lpm
- Integral pressure sensor, controller, and amplifier
- Detailed information: RE29262

Technical Data

Nominal Rated Pressure			200	350
Maximum pressure		bar	500	
Maximum flow		Lpm	5	
Hysteresis		% *	< 1 nom p	
Response sensitivity		% *	< 0.25 nom p	
Linearity		% *	± 1 nom p	
Step response	10% – 90%	ms	165	
(0.8 Lpm 20 cm3)	90% – 10%	ms	88	
Supply voltage		VDC	24	
Input command	Voltage	V	0 to 10	
	Current	mA	4 to 20	

(* flow > 0.2 Lpm and command > 10%)

Part Number	Description	Max. Quantity	Shipment (Business Days)
R901338404	DBETA-6X/P200G24K31A1V	5	10 day(s)
R901352135	DBETA-6X/P350G24K31A1V	5	10 day(s)

GoTo Focused Delivery Program: Proportional Valves

DBETBEX - Proportional Pressure Relief Valves with on-board electronics (OBE) and position feedback

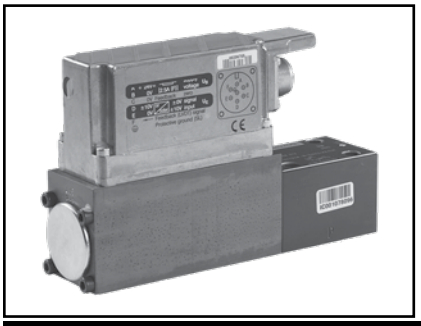

Type DBETBEX proportional pressure relief valves are remote-controlled (pilot) valves in conical seat design. They are used to limit system pressure. The valves are actuated by means of a proportional solenoid with on-board electronics. With these valves, rapid response times with low hysteresis can be achieved.

For complete engineering and design information: ***GoTo www.boschrexroth-us.com/GoToProportional***

Features

- Size 6
- Directly operated valves with position feedback and on-board electronics for limiting system pressure
- Adjustable through the position of the armature against the compression spring
- Detailed information: RE29151

Technical Data

Ambient temperature range		°C	–20...+50
Weight		kg	2.7
Viscosity range	recommended	mm^2/s	20...100
	max. permitted	mm^2/s	10...800
Pressure fluid temperature range		°C	–20...+70

Part Number	Description	Max. Quantity	Shipment (Business Days)
0811402073	DBETBEX-1X/250G24K31A1M	5	10 day(s)

GoTo Focused Delivery Program: Proportional Valves

DBET & DBETE - Proportional Pressure Relief Valves

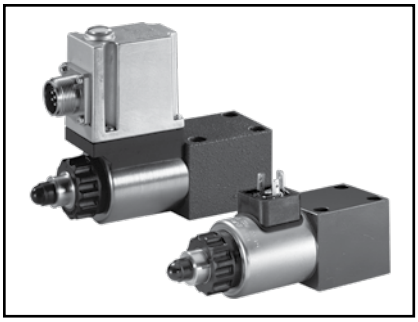

DBET proportional pressure relief valves for piloting applications. Pressure is limited by changing current to the proportional solenoid from an external amplifier or internal electronics (DBETE).

For complete engineering and design information: ***GoTo www.boschrexroth-us.com/GoToProportional***

Features

- Size 6
- Porting pattern according to ISO 4401-3, NFPA T3.5.1M R, and ANSI B93.7 D 03
- Valve for limiting a system pressure
- Proportional solenoid operation
- For subplate mounting
- Linearized pressure/command value characteristic curve
- Also available as screw-in cartridge valve
- Integral electronics (OBE) for type DBETE

Technical Data

Size				6
Operating pressure		p_{max}	bar (PSI)	420 (6100)
Flow		$q_{V\ max}$	l/min (GPM)	2 (0.5)
Maximum hysteresis			%	<4
Step response	0 to 100 %	T_u+T_g	ms	70
	100 to 0 %	T_u+T_g	ms	70
Operating voltage	OBE	U	V	24
Comm. value signal	OBE	U	V	0 to 10
		I	mA	4 to 20
Control electronics	Type DBET	Card, analog		VT-VSPA1-2-1X
		Card, digital		VT-VSPD-1-2X
		Module, analog		VT-MSPA1-1-1X
		Plug, analog		VT-SSPA1-1-1X

Part Number	Description	Max. Quantity	Shipment (Business Days)
R901000848	DBET-6X/350G24K4V	5	10 day(s)
R901029968	DBETE-6X/200G24K31A1V	5	10 day(s)
R901029969	DBETE-6X/315G24K31A1V	5	10 day(s)
R901029970	DBETE-6X/350G24K31A1V	5	10 day(s)

GoTo Focused Delivery Program: Proportional Valves

DBETR - Proportional Pressure Relief Valves

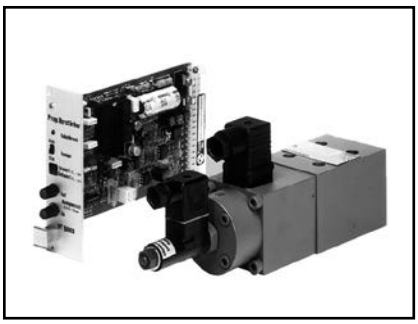

Proportional pressure relief valve type DBETR is a remote control valve. In design terms it is a direct operated pressure relief valve of poppet design. This valve regulates pressure in proportion to the electrical command value.

For complete engineering and design information: ***GoTo www.boschrexroth-us.com/GoToProportional***

Features

- Size 6
- Valve for electrical remote control of pressure
- Direct operated proportional pressure relief valve, of poppet design
- Proportional solenoid actuation with inductive position transducer (pressure balanced)
- Electrical closed loop position control of the spring pretension, hence low hysteresis
- Good repeatability
- Valve and electronic control from one source
- Detailed information: RA29166

Technical Data

Ambient temperature range		°C (F)	– 20 ... +50 (– 4 ... + 122)
Operating pressure	– Port P	bar (PSI)	... 350 (5076)
	– Port T, with pressure control	bar (PSI)	... 2 (29)
	– Without pressure control, T port	bar (PSI)	... 100 (1450)
Viscosity range		mm^2/s (SUS)	15 ... 380 (69.5 ... 1761)

Part Number	Description	Max. Quantity	Shipment (Business Days)
R900370146	DBETR-1X/230G24K4M	5	10 day(s)

GoTo Focused Delivery Program: Proportional Valves

DBEME - Proportional Pressure Relief Valves

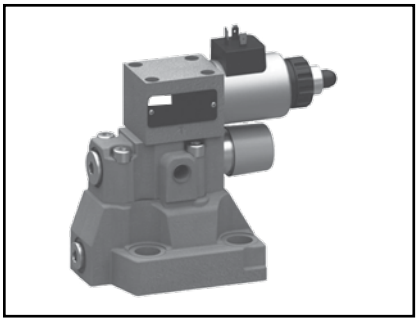

DBEME, series 7X proportional pressure relief valves limit pressure in hydraulic systems, where higher flow may be required.

For complete engineering and design information: ***GoTo www.boschrexroth-us.com/GoToProportional***

Features

- Size 10
- Pilot operated for limiting system pressure
- Operation by means of proportional solenoid
- Valve and control electronics from a single source
- Type DBEME with integrated electronics (OBE)
- For subplate mounting: Porting pattern according to ISO 6264

Technical Data

Hydraulic		Size	10
Weight		kg (lbs)	4.7 (10.4)
Installation orientation			Any
Ambient temperature range		°C (°F)	–20 to +50 (–4 to +122)
Operating pressure	– Ports A, B and X	bar (PSI)	350 (5100)
	– Port T	bar (PSI)	315 (4500)
	– Port Y		Separately and to the tank at zero pressure
Max. set pressure (at 315 bar [4500 PSI])		bar (PSI)	315 (4500)
Maximum pressure relief function (at 315 bar [4500 PSI])			350 (5100)
Max. flow		l/min (GPM)	275 (72.6)
Hydraulic fluid temperature range		°C (°F)	–20 to +80 (–4 to +176)
Hysteresis		%	≤ 5 of max. set pressure
Tolerance of command value		%	± 1.5 of max. set pressure
Linearity		%	± 3.5 of max. set pressure
Electrical			
Supply voltage		V	24 DC

Part Number	Description	Max. Quantity	Shipment (Business Days)
R901363308	DBEME 10-7X/315YG24K31A1V	5	10 day(s)

GoTo Focused Delivery Program: Proportional Valves

DBEP - Proportional Pressure Relief Valves

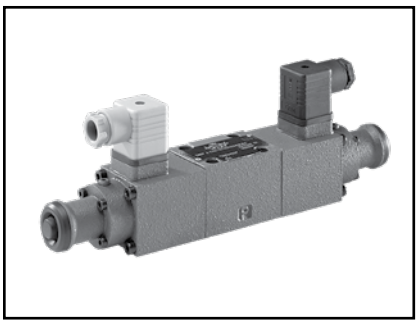

Proportional pressure relief valves of type DBEP are directly operated by means of proportional solenoids. They are used for converting electrical input signals into a proportional pressure output signal. These valves are used for limiting the pressure in a system. The proportional solenoids are controllable wet pin DC solenoids. They convert electrical currents proportionally into a mechanical force. An increase in the current results in a corresponding increase in the solenoid force. The set solenoid force remains constant over the entire control stroke.

For complete engineering and design information: ***GoTo www.boschrexroth-us.com/GoToProportional***

Features

- Size 6
- Valve for limiting the system pressure
- Operated via proportional solenoids
- Valve and control electronics from one supplier
- Detailed information: RE29164

Technical Data

Storage temperature range		°C	–20 to +80
Ambient temperature range		°C	–20 to +70
Operating pressure	Port P	bar	50 to 100
	Ports A, B	bar	0 to 50
	Port T	bar	30
Pressure fluid temperature range		°C	–20 to +80
Viscosity range		mm^2/s	2.8 to 380

Part Number	Description	Max. Quantity	Shipment (Business Days)
R900955082	DBEP 6 C06-1X/45AG24K4M	3	10 day(s)

GoTo Focused Delivery Program: Proportional Valves

DRE6X - Proportional Pressure Reducing Valves

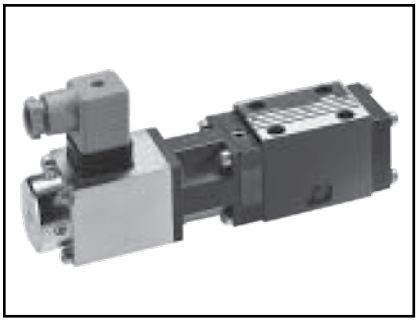

Model DRE6X proportional pressure reducing valves are pilot operated with a 3-way main stage. The pilot valve (pressure relief valve pilot stage) is supplied internally with a controlled flow of pilot oil. The valves are actuated by a proportional solenoid acting against a spring. The solenoid armature is cushioned to aid stability.

For complete engineering and design information: ***GoTo www.boschrexroth-us.com/GoToProportional***

Features

- Size 6
- Pilot operated valves for reducing system pressure at the consumer (pilot oil internal only)
- 3-way version (P-A/A-T), pmin = p in T
- Adjustable by means of the solenoid current
- Solenoid type Imax = 0.8 A
- Pressure limitation to a safe level even with faulty electronics (solenoid current I > Imax)
- For subplate attachment, mounting hole configuration to ISO 4401-03-02-0-94
- Plug-in connector to DIN 43650-AM2 included in scope of delivery
- External trigger electronics with ramps and valve calibration (order separately)

Technical Data

Size		6
Ambient temperature range	°C (°F)	−20 to +50 (−4 to +122)
Weight	kg (lbs.)	2.3 (5.1)
Pressure fluid temperature range	°C (°F)	−20 to +80 (−4 to +176)
Max. set pressur in A (at Qmin = 1 L/min (0.26 GPM)	bar (PSI)	175 (2540)
Minimum pressure in A	bar (PSI)	0 (relative) or pressure in T
Minimum inlet pressure in P	bar (PSI)	$p_P = p_A + \geq 5$
Maximum working pressure	bar (PSI)	Port P: 315 (4600)
Maximum pressure	bar (PSI)	Port T: 250 (3626) [B sealed]
Maximum flow	L/min (GPM)	40 (10.6)
Maximum solenoid current	I_{max}	0.8 A
Coil resistance R_{20}	Ω	22
Hysteresis	%	≤ 4
Manufacturing tolerance for p_{max}	%	≤ 10

Part Number	Description	Max. Quantity	Shipment (Business Days)
0811402055	DRE 6X-1X/175MG24-8NZ4M	5	10 day(s)

GoTo Focused Delivery Program: Proportional Valves

DREBE6X - Proportional Pressure Reducing Valves

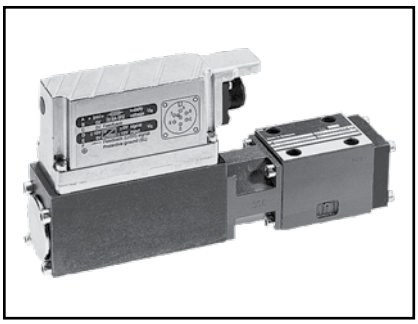

DREBE6X is a pilot operated pressure reducing/relieving valve for high performance applications. Pressure in port A is controlled by a proportional solenoid using position feedback with on-board electronics (OBE).

For complete engineering and design information: ***GoTo www.boschrexroth-us.com/GoToProportional***

Features

- Sizes 6
- Porting pattern according to ISO 4401-3, NFPA T3.5.1M R, and ANSI B93.7 D 03
- Valve for reducing a system pressure
- Proportional solenoid operation
- Adjustable by specifying the position of the solenoid armature
- Integral electronics (OBE)

Technical Data

Size				6
Type				DREBE6X
Operating pressure	Port P	p_{max}	bar (PSI)	315 (4600)
	Port T	p_{max}	bar (PSI)	250 (3600)
Flow		$q_{V\,max}$	l/min (GPM)	40 (10.6)
Maximum hysteresis			%	≤ 1
Operating voltage	OBE	U	V	24
Command value signal	OBE	U	V	0 to 10
		I	mA	4 to 20

Part Number	Description	Max. Quantity	Shipment (Business Days)
0811402080	DREBE 6X-1X/175MG24K31A1M	5	10 day(s)

GoTo Focused Delivery Program: Proportional Valves

DRE(M) & DRE(M)E - Proportional Pressure Reducing Valves

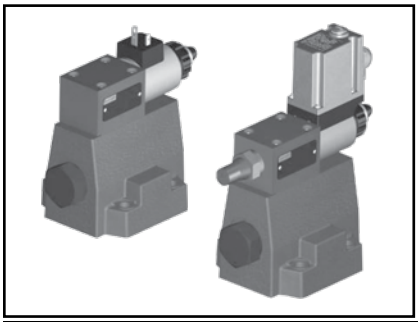

Type DRE(M) and DRE(M)E valves are pilot operated pressure reducing valves, used to reduce operating pressure. Available without maximum pressure limitation (DRE.) or with maximum pressure limitation (DREM.) and with or without integrated control electronics. This valve reduces operating pressure by means of proportional solenoids.

For complete engineering and design information: ***GoTo www.boschrexroth-us.com/GoToProportional***

Features

- Size 10
- Valve for reducing an operating pressure
- Proportional solenoid with rotatable and detachable coil
- Linearized command value-pressure characteristic curve
- Maximum pressure limitation optional
- For subplate mounting: Porting pattern according to ISO 5781

Technical Data

Size			10	
Maximum working pressure	Port A and B	bar (PSI)	315 (4500)	
	Port Y	bar (PSI)	Separately and to the tank at zero pressure	
Maximum set pressure in channel A		Pressure rating (bar [PSI]):	200 (2900)	315 (4500)
		bar (PSI)	200 (2900)	315 (4500)
Minimum set pressure (command value = 0)		bar (PSI)	2 (30)	
Maximum pressure limit		Pressure rating (bar [PSI]):	200 (2900)	315 (4500)
		bar (PSI)	230 (3300)	350 (5100)
Maximum flow		l/min (GPM)	200 (52.8)	
Operating voltage		V	24 DC	
Hysteresis		%	± 3.5 of the max. setting pressure	
Repeatability		%	< ± 2 of the max. setting pressure	
Linearity		%	± 2 of the max. setting pressure	

Part Number	Description	Max. Quantity	Shipment (Business Days)
R901272516	DREE 10-6X/200YMG24K31A1M	5	10 day(s)

GoTo Focused Delivery Program: Proportional Valves

3DREP(E) - Proportional Pressure Reducing Valves

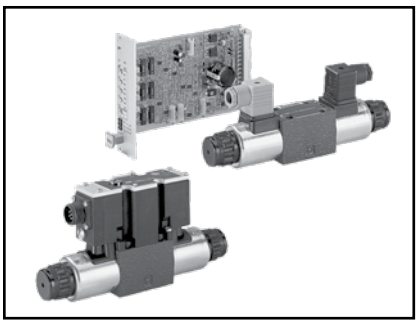

3DREP6 is a pressure reducing/relieving valve for very low pressures in special applications. The dual solenoid model-C regulates port A or port B. The most common applicaton is 25 bar (360 PSI) on the 4WRZ(E) 10..32 proportional directional valve. Pressure is directly controlled by changing current to a proportional solenoid by external amplifier or by integrated electronics (3DREPE6).

For complete engineering and design information: ***GoTo www.boschrexroth-us.com/GoToProportional***

Features

- Size 6
- Porting pattern according to ISO 4401-3, NFPA T3.5.1M R, and ANSI B93.7 D 03
- Valve for reducing a system pressure
- Proportional solenoid operation
- For subplate mounting
- Integrated electronics (OBE) for type 3DREPE

Technical Data

Size				6
Operating pressure		p_{max}	bar (PSI)	100 (1450)
Flow		$q_{V\ max}$	l/min (GPM)	15 (4.0)
Maximum hysteresis			%	5
Operating voltage	OBE	U	V	24
Command value signal	OBE	U	V	±10
		I	mA	4 to 20
Control electronics	Type 3DREP	Card, digital		VT-VSPD-1
		Module, analog		VT 11118

Part Number	Description	Max. Quantity	Shipment (Business Days)
R900955887	3DREP 6 C-2X/25EG24N9K4/M	5	10 day(s)
R901205987	3DREP 6 C-2X/25EG24N9K4/M-674	5	10 day(s)
R900929529	3DREP 6 C-2X/25EG24N9K4/V	5	10 day(s)
R900925484	3DREPE 6 C-2X/25EG24N9K31/A1V	5	10 day(s)
R900926984	3DREPE 6 C-2X/25EG24N9K31/F1V	5	10 day(s)

GoTo Focused Delivery Program: Proportional Valves

4WS2EM - Directional Servo Valves

Valves of type 4WS(E)2EM10-5X/... are electrically operated, 2-stage directional servo-valves. They are mainly used to control position, force and velocity.

For complete engineering and design information: ***GoTo www.boschrexroth-us.com/GoToProportional***

Features

- Size 6
- Valve to control position, force, pressure or velocity
- 2-stage servo valve with mechanical or mechanical and electric return
- 1st stage as nozzle flapper plate amplifier
- Dry control motor, no pollution of the solenoid gaps by the hydraulic fluid
- Can also be used as 3-way version
- Wear-free control spool return element
- Valve and integrated control electronics are adjusted and tested
- Control spool with flow force compensation
- Control sleeve centrically fixed; thus low susceptibility to temperature and pressure
- Pressure chambers at the control sleeve with gap seal, no wear of the seal ring
- Detailed information: RE29583

Technical Data

Storage temperature range		°C	–20 to +80
Ambient temperature range		°C	–20 to +60 valve with OBE
			–30 to +100 valve without OBE
Operating pressure	Pilot control stage, pilot oil supply	bar	10 to 210 or 10 to 315
	Main valve, port P, A, B	bar	Up to 315
Return flow pressure	Port T		
	Pilot oil return internal	bar	Pressure peaks < 100 permitted, static < 10
	Pilot oil return external	bar	Up to 315
	Port Y	bar	Pressure peaks < 100 permitted, static < 10
Hydraulic fluid temperature range		°C	–15 to +80, preferably +40 to +50
Viscosity range		mm^2/s	15 to 380, preferably 30 to 45

Part Number	Description	Max. Quantity	Shipment (Business Days)
R900772317	4WS2EM10-5X/60B11T315K31CV-114	3	10 day(s)

GoTo Focused Delivery Program: Proportional Valves / Pump Systems

SYDFEE - Pressure & Flow Control System

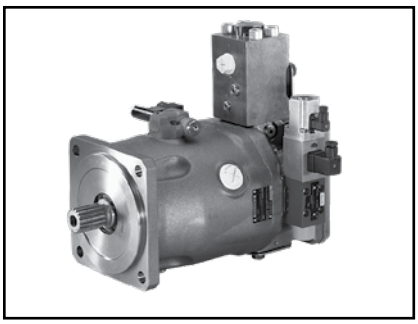

The control system is used for the electro-hydraulic control of swivel angle, pressure and power (partially optional) of an axial piston variable displacement pump.

For complete engineering and design information: ***GoTo www.boschrexroth-us.com/GoToProportional***

Features

- With axial piston variable displacement pump A10VSO.../31
- Size 140
- Component series 2X
- Maximum operating pressure 280 bar
- Function: Swivel angle control, pressure control, torque limitation, master/slave
- Communication: Sercos, PROFINET, EtherCAT, EtherNET/IP, POWERLINK, VARAN, analog
- Detailed information: RE30030

Technical Data

Size			**18**	**28**	**45**	**71**	**100**	**140**
Displacement		cm^3	18	28	45	71	100	140
Speed	▶ maximum at $V_{g\ max}$	rpm	3300	3000	2600	2200	2000	1800
	▶ maximum at $V_g < V_{g\ msax}$	rpm	3900	3600	3100	2600	2400	2100
Minimum speed		rpm	250					
Maximum flow	▶ n_{nom} and $V_{g\ max}$	l/min	59.4	84	117	156	200	252
	▶ n_E = 1500 rpm and $V_{g\ max}$	l/min	27	42	68	107	150	210
Maximum torque (Δp = 280 bar)		Nm	80.1	125	200	316	445	623
Maximum operating pressure		bar	280					
Admissible inlet pressure		bar	0.8 ... 10.0					
Hydraulic fluid temperature range		°C	–20 ... +70					

Part Number	Description	Max. Quantity	Shipment (Business Days)
R901076539	SYDFEE-2X/140R-PSB12KD3-0000-A0A1VXX	1	10 day(s)

GoTo Focused Delivery Program: Proportional Valves / Pump Systems

SYHDFEE - Pressure & Flow Control System

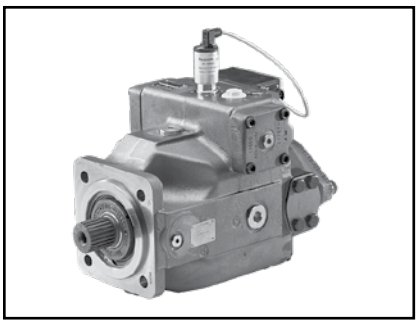

The control system is used for the electro-hydraulic control of swivel angle, pressure and power (partially optional) of an axial piston variable displacement pump.

For complete engineering and design information: ***GoTo www.boschrexroth-us.com/GoToProportional***

Features

- Size 250
- Component series 1X
- Maximum operating pressure 350 bar
- With axial piston variable displacement pump A4VSO
- Function: Swivel angle control, pressure control, torque limitation, master/slave
- Communication: Sercos, PROFINET, EtherCAT, EtherNET/IP, POWERLINK, VARAN, analog
- Detailed information: RE30035

Technical Data

Size			**40**	**71**	**125**	**180**	**250**	**355**
Displacement		cm^3	40	71	125	180	250	355
Speed	▶ maximum at $V_{g\,max}$	rpm	2600	2200	1800	1800	1900	1700
	▶ maximum at $V_{g\,max}$ and HFC Fluids	rpm	–	2200	1800	1800	1500	1500
Minimum speed		rpm	200					
Maximum flow	▶ n_{nom} and $V_{g\,max}$	l/min	104	156	225	324	450	533
	▶ n_E = 1500 rpm and $V_{g\,max}$	l/min	60	107	186	270	375	533
Maximum torque (Δp = 280 bar)		Nm	223	395	696	1002	1391	1976
Maximum operating pressure		bar	350					
Minimum operating pressure		bar	≥ 20					
Admissible inlet pressure		bar	0.8 ... 30.0					
Hydraulic fluid temperature range		°C	–20 ... +70					

Part Number	Description	Max. Quantity	Shipment (Business Days)
R901076538	SYHDFEE-1X/250R-VZB25U99-0000-A0A1V	1	10 day(s)

GoTo Focused Delivery Program: Standard Manifolds

ABM6 & AB10PN - Automotive Bar Manifolds

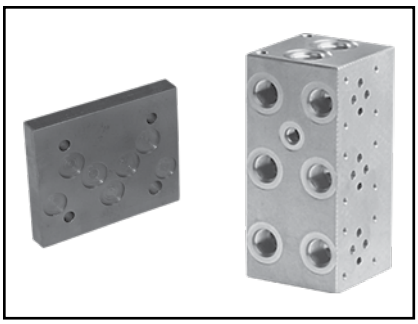

Industrial hydraulic manifolds are used to interconnect various components within a hydraulic system. Standard hydraulic manifolds include a variety of proven manifold designs for a wide range of industrial hydraulic applications. Standard manifolds may improve the assembly & test time of your system, save cost, reduce leak points and improve the serviceability and aesthetics of your system compared to alternate connection methods.

For complete engineering and design information: ***GoTo www.boschrexroth-us.com/GoTomanifolds***

Features

- ABM6PN: Size 6 (D03), normal flow
- AB10PN: Size 10 (D05), normal flow with bottom-ported P & T
- Sandwich plates, tap-in connection, SAE-4 port
- Ductile iron and aluminum

Technical Data

Model Code	ABM6PN-1X/02...	ABM6PN-1X/02...	ABM10PN-1X/03...	ABM10PN-1X/05...
Number of stations	2	4	3	5
Description	Automotive bar manifold with bottom ported P & T			
Circuit	Parallel circuit, normal flow			
Size	Size 6 (D03)		Size 10 (D05)	
Material	Ductile iron (65-45-12)			
Max. pressure (psi)	5000			
Ports	BSPP			
Details	Metric mounting taps			

See technical data sheet RA 09907 for detailed technical data.

Part Number	Description	Max. Quantity	Shipment (Business Days)
R978908745	ABM6PN-1X/02D2-01GM	3	10 day(s)
R978908746	ABM6PN-1X/03D2-01GM	3	10 day(s)
R978908747	ABM6PN-1X/04D2-01GM	3	10 day(s)
R978908748	ABM6PN-1X/05D2-01GM	3	10 day(s)
R978006336	ABM10PN-1X/03D3-01GBM	3	10 day(s)
R978006338	ABM10PN-1X/05D3-01GBM	3	10 day(s)
R978052637	MAN ASSY AGA17006 INLET WITH LS DRAIN	3	10 day(s)

GoTo Focused Delivery Program: Standard Manifolds

BM - Parallel Bar Manifolds

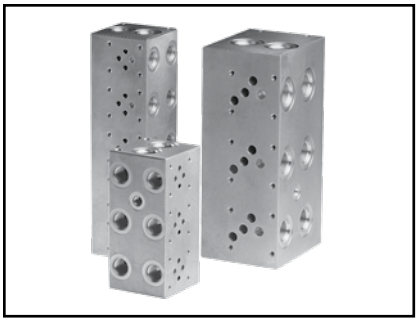

Industrial hydraulic manifolds are used to interconnect various components within a hydraulic system. Standard hydraulic manifolds include a variety of proven manifold designs for a wide range of industrial hydraulic applications. Standard manifolds may improve the assembly and test time of your system, save cost, reduce leak points and improve the serviceability and aesthetic of your system compared to alternate connection methods.

For complete engineering and design information: ***GoTo www.boschrexroth-us.com/GoTomanifolds***

Features

- BM6PH: Size 6 (D03), high flow
- BM10PX: Size 10 (D05), extra high flow with X & Y ports
- BM_PN: Sizes 6 (D03), 10 (D05), 16 (D07), normal flow
- Sandwich plates, tap-in connection, SAE-4 port
- Ductile iron and aluminum

Technical Data

Model Code	BM6PN	BM6PH	BM10PN	BM10PX	BM16PN
Number of stations	6		10		16
Description	Industrial hydraulics bar manifold				
Circuit	Normal	High	Normal	Extra High	Normal
Size	Size 6 (D03)		Size 10 (D05)		Size 16 (D07)
Material	Ductile Iron (65-45-12), Aluminum (6061-T6)				
Max. pressure (psi)	5000 (Ductile iron), 3000 (Aluminum)				
Ports	SAE ports only				
Valve spacing (in.)	2.13		3.25		4.0

Note: GoTo deliveries do not include Relief Valve or Isolation options

Manifold Mounting Kit

Material No.	Material Description	Explanation
R9788398831	Size 6 (DO3) Mounting kit	Port Style 12 SAE, Normal Flow
R9788398832	Size 10 (DO5) Mounting kit	Port Style 12 SAE, Normal Flow

Part Number	Description	Max. Quantity	Shipment (Business Days)
R978907060	BM6PH-1X/01A2-12	3	10 day(s)
R978907061	BM6PH-1X/02A2-12	3	10 day(s)
R978907076	BM6PH-1X/02D2-12	3	10 day(s)
R978907062	BM6PH-1X/03A2-12	3	10 day(s)
R978907077	BM6PH-1X/03D2-12	3	10 day(s)
R978907063	BM6PH-1X/04A2-12	3	10 day(s)
R978907078	BM6PH-1X/04D2-12	3	10 day(s)
R978907064	BM6PH-1X/05A2-12	3	10 day(s)
R978907079	BM6PH-1X/05D2-12	3	10 day(s)
R978901859	BM6PN-1X/01A2-12	3	10 day(s)
R978901873	BM6PN-1X/01D2-12	3	10 day(s)
R978901860	BM6PN-1X/02A2-12	3	10 day(s)
R978901874	BM6PN-1X/02D2-12	3	10 day(s)
R978901861	BM6PN-1X/03A2-12	3	10 day(s)
R978901875	BM6PN-1X/03D2-12	3	10 day(s)
R978901862	BM6PN-1X/04A2-12	3	10 day(s)
R978901876	BM6PN-1X/04D2-12	3	10 day(s)
R978901863	BM6PN-1X/05A2-12	3	10 day(s)
R978901877	BM6PN-1X/05D2-12	3	10 day(s)
R978901866	BM10PN-1X/01A3-12	3	10 day(s)
R978901880	BM10PN-1X/01D3-12	3	10 day(s)
R978901867	BM10PN-1X/02A3-12	3	10 day(s)
R978901881	BM10PN-1X/02D3-12	3	10 day(s)
R978901868	BM10PN-1X/03A3-12	3	10 day(s)
R978901882	BM10PN-1X/03D3-12	3	10 day(s)
R978901869	BM10PN-1X/04A3-12	3	10 day(s)
R978901883	BM10PN-1X/04D3-12	3	10 day(s)
R978901870	BM10PN-1X/05A3-12	3	10 day(s)
R978901884	BM10PN-1X/05D3-12	3	10 day(s)
R978918115	BM10PX-XX/01A3-12	3	10 day(s)
R978918463	BM10PX-XX/01D3-12	3	10 day(s)
R978918116	BM10PX-XX/02A3-12	3	10 day(s)
R978918464	BM10PX-XX/02D3-12	3	10 day(s)
R978918117	BM10PX-XX/03A3-12	3	10 day(s)
R978918465	BM10PX-XX/03D3-12	3	10 day(s)
R978918118	BM10PX-XX/04A3-12	3	10 day(s)
R978918466	BM10PX-XX/04D3-12	3	10 day(s)
R978918119	BM10PX-XX/05A3-12	3	10 day(s)
R978918467	BM10PX-XX/05D3-12	3	10 day(s)
R978914561	BM16PN-1X/01D4-12	3	10 day(s)
R978914567	BM16PN-1X/02D4-12	3	10 day(s)
R978914573	BM16PN-1X/03D4-12	3	10 day(s)
R978839831	BRKT ASSY D03 BAR MANIFOLD	3	10 day(s)
R978839832	BRKT ASSY D05 BAR MANIFOLD	3	10 day(s)

GoTo Focused Delivery Program: Standard Manifolds

SP6SN, SP10SH, & SP16SH - Subplates

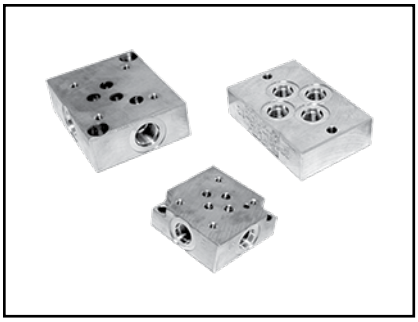

Industrial Hydraulic manifolds are used to interconnect various components within a hydraulic system. Standard hydraulic manifolds include a variety of proven manifold designs for a wide range of industrial hydraulic applications. Standard manifolds may improve the assembly & test time of your system, save cost, reduce leak points and improve the serviceability and aesthetic of your system compared to alternate connection methods.

For complete engineering and design information: ***GoTo www.boschrexroth-us.com/GoTomanifolds***

Features

- Sizes: 6 (D03), 10 (D05) & 16 (D07)
- Aluminum and ductile iron
- SAE-threaded side ports
- Includes mounting kit for the subplate

Technical Data

Model Code	SP6SN	SP10SH	SP16SH
Size	6 (D03)	10 (D05)	16 (D07)
Flow	Normal	High	
Circuit	Normal	High	Normal
Material	Ductile Iron (65-45-12), Aluminum (6061-T6)		Ductile Iron (65-45-12)
Max Pressure (psi)	5000 (Ductile iron), 3000 (Aluminum)		
Ports	SAE ports only		
Valve mounting	10-24 x 0.50 DP	1/4-20 x 0.60 DP	1/4-20 x 0.70 DP

Part Number	Description	Max. Quantity	Shipment (Business Days)
R978908182	SP6SN-1X/A-12	3	10 day(s)
R978908179	SP6SN-1X/D-12	3	10 day(s)
R978908203	SP10SH-1X/D-12	3	10 day(s)
R978910456	SP16SH-1X/D-12	3	10 day(s)

GoTo Focused Delivery Program: Standard Manifolds

CP6, CP10, & CP16 - Cover Plates

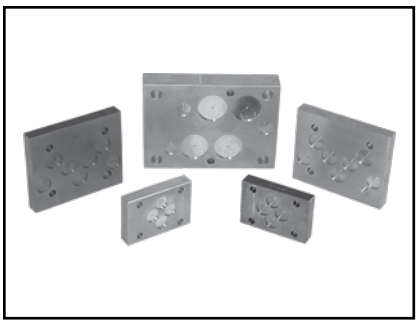

Industrial Hydraulic manifolds are used to interconnect various components within a hydraulic system. Standard hydraulic manifolds include a variety of proven manifold designs for a wide range of industrial hydraulic applications. Standard manifolds may improve the assembly & test time of your system, save cost, reduce leak points and improve the serviceability and aesthetic of your system compared to alternate connection methods.

For complete engineering and design information: ***GoTo www.boschrexroth-us.com/GoTomanifolds***

Features

- Cover plates, all ports blocked
- Size 6 (DO3); Size 10 (DO5); Size 16 (D07)
- Ductile iron and aluminum
- Detailed information: RA09907

Technical Data

Model Code	CP6...	CP10...	CP16...
Description	Industrial hydraulic cover plate		
Circuit	Normal		
Size	Size 6 (D03)	Size 10 (D03)	Size 16 (D07)
Material	Ductile Iron (65-45-12), Aluminum (6061-T6)		
Max Pressure (psi)	5000 (Ductile iron), 3000 (Aluminum)		
Ports	SAE mounting		

Part Number	Description	Max. Quantity	Shipment (Business Days)
R978839479	CP6NN-1X/A-12	3	10 day(s)
R978839953	CP6NN-XX/D-01	5	10 day(s)
R978839952	CP6NN-XX/D-12	3	10 day(s)
R978839477	CP10NN-1X/A-12	3	10 day(s)
R978839950	CP10NN-XX/D-12/P	3	10 day(s)
R978907736	CP16NN-XX/D-12	3	10 day(s)

GoTo Focused Delivery Program: Standard Manifolds

Sandwich Plates

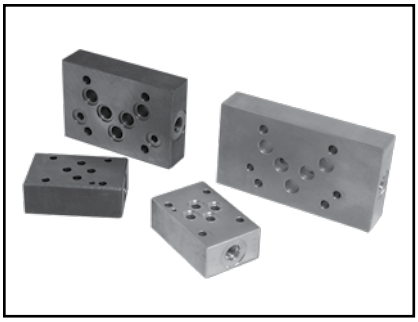

Industrial Hydraulic manifolds are used to interconnect various components within a hydraulic system. Standard hydraulic manifolds include a variety of proven manifold designs for a wide range of industrial hydraulic applications. Standard manifolds may improve the assembly & test time of your system, save cost, reduce leak points and improve the serviceability and aesthetic of your system compared to alternate connection methods.

For complete engineering and design information: ***GoTo www.boschrexroth-us.com/GoTomanifolds***

Features

- Sandwich plates, tap-in connection. SAE-4 port
- Size 6 (DO3); Size 10 (DO5)
- Ductile iron and aluminum
- Detailed information: RA09907

Technical Data

Model Code	TP6... GPT TP6... GAB	TP10... GPT TP10... GAB
Description	Industrial hydraulic sandwich plate – tap-in connection	
Circuit	Tap-in connection	
Size	Size 6 (DO3)	Size 10 (DO5)
Material	Ductile Iron (65-45-12), Aluminum (6061-T6)	
Max Pressure (PSI)	5000 (Ductile iron), 3000 (Aluminum)	
Ports	SAE-4 port	

Part Number	Description	Max. Quantity	Shipment (Business Days)
R978908990	TP6GAB-1X/A-12	3	10 day(s)
R978908991	TP6GAB-1X/D-12	3	10 day(s)
R978908988	TP6GPT-1X/A-12	3	10 day(s)
R978908989	TP6GPT-1X/D-12	3	10 day(s)
R978908992	TP10GAB-1X/A-12	3	10 day(s)
R978908993	TP10GAB-1X/D-12	3	10 day(s)
R978908994	TP10GPT-1X/A-12	3	10 day(s)
R978908995	TP10GPT-1X/D-12	3	10 day(s)

GoTo Focused Delivery Program: Standard Manifolds

AP6, AP10, & AP16 - Adapter Plates

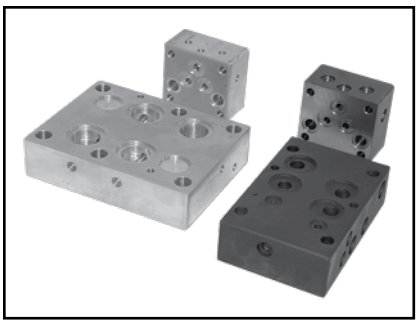

Industrial Hydraulic manifolds are used to interconnect various components within a hydraulic system. Standard hydraulic manifolds include a variety of proven manifold designs for a wide range of industrial hydraulic applications. Standard manifolds may improve the assembly & test time of your system, save cost, reduce leak points and improve the serviceability and aesthetic of your system compared to alternate connection methods.

For complete engineering and design information: ***GoTo www.boschrexroth-us.com/GoTomanifolds***

Features

- Valve adapters
- - AP6-10: D03 (size 6) to D05 (size 10)
- - AP6-16: D03 (size 6) to D07 (size 16)
- - AP10-16: D05 (size 10) to D07 (size 16)
- Ductile iron and aluminum

Technical Data

Model Code	AP6-10	AP6-16	AP10-16
Description	Industrial hydraulic adapter plate		
Circuit	Normal		
Size	Size 6 (D03) to Size 10 (D05)	Size 6 (D03) to Size 16 (D07)	Size 10 (D05) to Size 16 (D07)
Material	Ductile iron (65-45-12), Aluminum (6061-T6)		
Max Pressure (psi)	5000 (Ductile iron), 3000 (Aluminum)		
Mounting bolts	SAE		SAE & Metric

Part Number	Description	Max. Quantity	Shipment (Business Days)
R978908209	AP6-10-1X/A-12	3	10 day(s)
R978908220	AP6-10-1X/D-12	3	10 day(s)
R978015246	AP6-10-XX/D-12 WITH PILOT PORTS	3	10 day(s)
R978908216	AP6-16-1X/A-12	3	10 day(s)
R978908217	AP6-16-1X/D-12	3	10 day(s)
R978916382	AP10-16-1X/A-01	3	10 day(s)
R978908210	AP10-16-1X/A-12	3	10 day(s)
R978916383	AP10-16-1X/D-01	3	10 day(s)
R978908211	AP10-16-1X/D-12	3	10 day(s)

GoTo Focused Delivery Program: Standard Manifolds

RVB - Relief Valve Blocks

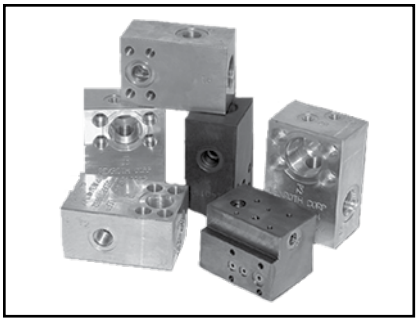

Industrial Hydraulic manifolds are used to interconnect various components within a hydraulic system. Standard hydraulic manifolds include a variety of proven manifold designs for a wide range of industrial hydraulic applications. Standard manifolds may improve the assembly & test time of your system, save cost, reduce leak points and improve the serviceability and aesthetic of your system compared to alternate connection methods.

For complete engineering and design information: ***GoTo www.boschrexroth-us.com/GoTomanifolds***

Features

- Flange sizes: 3/4 to 1-1/2
- SAE flange or O-ring ports
- High and Normal Pressure options available
- DBDS Pressure relief valve (RE25402) ordered separately

Technical Data

Model Code	RVB 3/4	RVB 1	RVB 1 1/4	RVB 1 1/2
Description	Industrial hydraulic pump relief block			
Circuit	Normal			
Flange size	3/4	1	1 1/4	1 1/2
Relief Valve	DBDS10		DBDS20	DBDS30
Material	Ductile iron (65-45-12), Aluminum (6061-T6)		Ductile Iron (65-45-12)	
Max Pressure (psi)	5000 (Ductile iron), 3000 (Aluminum)			
Threadeds bolts	SAE O-ring	SAE Flanged & SAE O-ring		SAE Flanged

Part Number	Description	Max. Quantity	Shipment (Business Days)
R978904346	RVB 3/4N1X/A 12-12V 42-13	3	10 day(s)
R978838222	RVB 3/4N1X/D 12-12V 42-13	3	10 day(s)
R978906513	RVB 1N1X/D 07V	3	10 day(s)
R978904348	RVB 1N1X/A 16-12V 42-13	3	10 day(s)
R978839333	RVB 1N1X/D 16-12V	3	10 day(s)
R978906521	RVB 1 1/4H1X/D 07V	3	10 day(s)
R978838228	RVB 1 1/4H1X/D 20-12V 42-13	3	10 day(s)
R978906523	RVB 1 1/2H1X/D 07V	3	10 day(s)

GoTo Focused Delivery Program: Proportional Electronics

VT-MACAS - Analog Positioning Module

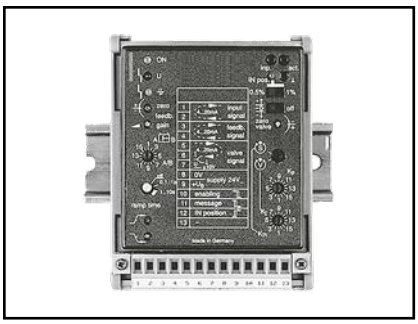

Analog position controller type VT-MACAS supports simple position or velocity control loops for hydraulic motion systems, in combination with Rexroth servo cylinders and analog position measurement systems (potentiometers).

For complete engineering and design information: ***GoTo www.boschrexroth-us.com/gotoelectronics***

Features

- DIN-rail mountable
- Open-circuit detection for feedback signal cable
- Short-circuit-proof interfaces
- Measurement taps on front panel
- Deadband compensation can be deactivated
- Position: PT1 control
- Detailed information: RE30050

Technical Data

Supply voltage		Nominal 24 V = Battery voltage 21...40 V, Rectified alternating voltage Ueff = 21...28 V (one-phase, full-wave rectifier)
Current consumption, max.	mA	200
Controller type		Position: PT_1 Velocity: P_I
Zero point valve	%	±5
Special features		– Switchable from position to velocity control – Switchable position window – Test points on front plate – Interfaces short-circuit-proof
Format/design	mm	(86 x 110 x 95.5) / module
Mounting		Top hat rail TH35-7,5 or G rail G32 according to EN 60715
Connection		Connectors + terminals
Ambient temperature	°C	0...+70
Storage temperature range	°C	–20...+70
Weight	m	0.38 kg

Part Number	Description	Max. Quantity	Shipment (Business Days)
0811405139	VT-MACAS-500-10/V0	3	10 day(s)

GoTo Focused Delivery Program: Proportional Electronics

VT-MRPA1-100 - Analog Amplifier

The amplifier modules are snapped onto top hat rails according to EN 60715. The electrical connection is established via screw terminals. The modules are operated at 24 V direct voltage. The amplifier modules have a power supply unit with making current limiter. This unit supplies all internally required positive and negative supply voltages. The making current limiter prevents high making current peaks.

For complete engineering and design information: ***GoTo www.boschrexroth-us.com/gotoelectronics***

Features

- Component series 1X
- Analog, modular design
- Intended for controlling direct operated proportional pressure relief valves with electrical position feedback (type DBETR-1X) or proportional flow control valves with electrical position feedback (type 2FRE...)
- Detailed information: RE30221

Technical Data

Operating voltage			24 VDC + 40% – 20%
Operating range: – Upper limit value – Lower limit value	 $u_B(t)_{max}$ $u_B(t)_{min}$	 V V	 35 18
Power consumption	P_S	VA	< 24
Current consumption	I	A	< 2
Type of connection			12 screw terminals
Type of mounting			Top hat rail TH35-7.5 according to EN 60715
Protection class			IP20 according to EN 60529
Dimensions (W x H x D)		mm	40 x 79 x 85.5
Admissible operating temperature range		°C	0 to +50
Storage temperature range		°C	–25 to +70
Weight		m	0.14 kg

Part Number	Description	Max. Quantity	Shipment (Business Days)
R900779644	VT-MRPA1-100-1X/V0/0	3	10 day(s)

GoTo Focused Delivery Program: Proportional Electronics

VT-MRPA2-1 - Analog Amplifier

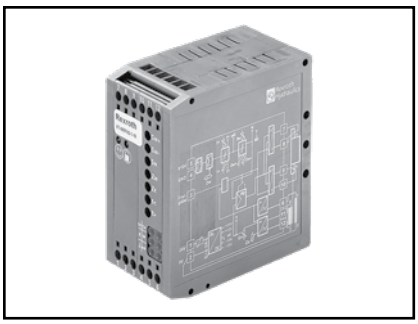

The amplifier modules are to be snapped onto top hat rails according to EN 60715. The electrical connection is made by means of screw terminals. The modules are operated at 24V DC. The amplifier modules are provided with a power supply unit with switch-on current limiter. The power supply unit provides all internally required positive and negative supply voltages. The switch-on current limiter prevents high switch-on current peaks.

For complete engineering and design information: ***GoTo www.boschrexroth-us.com/gotoelectronics***

Features

- Component series 1X
- Suitable for controlling direct operated 4/3 and 4/2 proportional directional valves with electrical position feedback, type 4WRE, sizes 6 and 10, component series 2X
- Command value input ±10 V (VT-MRPA2), 0 to 10 V (VT-MRPA1)
- Ramp generator with separately adjustable “up/down” ramp times
- Detailed information: RE30219

Technical Data

Operating voltage			24 VDC + 40% – 20%
Operating range: – Upper limit value – Lower limit value	 $u_B(t)_{max}$ $u_B(t)_{min}$	 V V	 35 18
Power consumption	P_S	VA	< 24
Current consumption	I	A	< 2
Type of connection			12 screw terminals
Type of mounting			Top hat rail TH35-7.5 according to EN 60715
Protection class			IP20 according to EN 60529
Dimensions (W x H x D)		mm	40 x 79 x 85.5
Admissible operating temperature range		°C	0 to +50
Storage temperature range		°C	–25 to +70
Weight		m	0.14 kg

Part Number	Description	Max. Quantity	Shipment (Business Days)
R900249895	VT-MRPA2-1-1X/V0/0	3	10 day(s)

GoTo Focused Delivery Program: Proportional Electronics

VT3002 - Card Holder

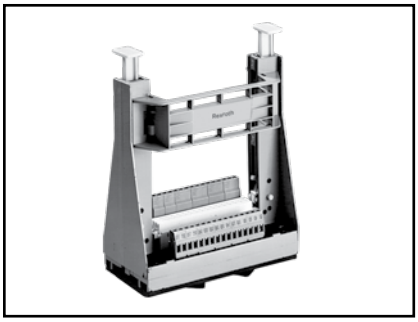

The VT-3002 card holder is available in either a 32-pin or 48-pin connection format (Form D or Form F). Individual screw terminals aid in robust field connections while the VT-3002 provides a stable platform to anchor field connections. Push buttons on each side permit releasing an amplifier board without incurring undue stress on an amplifier's faceplate.

For complete engineering and design information: ***GoTo www.boschrexroth-us.com/gotoelectronics***

Features

- Card holders allow the simple installation and wiring of individual electronic cards in Euro format, e.g. in switching cabinets
- Can be screwed on or snapped onto DIN rails
- Vertical mounting onto a DIN rail, possible with an additional adaptor (included within the scope of supply)
- Stable base
- Card locking and releasing by lever operation
- Connection via screw terminals

Technical Data

Terminal voltage to VDE 0110 C		*U*	VAC	Max. 48 VAC/DC
Current loading capacity	– VT 3002-1-2X/32D	*I*	A	4 A
	– VT 3002-1-2X/32F	*I*	A	4 A
	– VT 3002-1-2X/48F	*I*	A	4 A
Cross-section connection		*A*		Plug-in screw terminals max. 4 mm^2
Connection type: (socket connection)	– VT 3002-1-2X/32D			32-pin socket connector, form D, DIN 41612
	– VT 3002-1-2X/32F			32-pin socket connector, form F, DIN 41612
	– VT 3002-1-2X/48F			48-pin socket connector, form F, DIN 41612
Pin allocation:	– VT 3002-1-2X/32D			Even numbered, rows a/c
	– VT 3002-1-2X/32F			Even numbered, rows b/z
	– VT 3002-1-2X/48F			Even numbered, rows d/b/z
Permissible ambient temperature range		ϑ	°C (°F)	–20 to +70 (–4 to +158)
Weight		*m*	kg (lbs.)	0.5/0.8 (1.1/1.8)

Part Number	Description	Max. Quantity	Shipment (Business Days)
R900020154	VT 3002-1-2X/48F (card holder)	5	10 day(s)

GoTo Focused Delivery Program: Proportional Electronics

VT-DFP - Pilot Control Valves

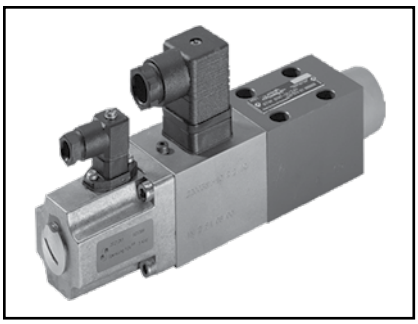

The VT-DFP-A-2X/G24K0/0/V is the pilot control valve for the SYDFE1 system. In conjunction with amplifier VT5041, it controls the swashplate angle of the pump in either closed loop pressure or flow control. This valve is to be considered a part and not a complete control.

For complete engineering and design information: ***GoTo www.boschrexroth-us.com/gotoelectronics***

Features

- Pilot valve for the pressure and flow control system SY(H)DFE
- Actuation by means of a proportional solenoid with electrical feedback
- Control electronics: VT-DFP (for SY(H)DFE1) >> external analog amplifier VT 5041-2X

Technical Data

Type			VT-DFP
Operating pressure	Port A, P	bar (PSI)	350 (5100)
	Port T	bar (PSI)	100 (1450)
Control			External amplifier VT-5041-3X

Part Number	Description	Max. Quantity	Shipment (Business Days)
R900703811	VT-DFP-A-2X/G24K0/0/V	5	10 day(s)
R900712200	VT-DFPE-A-2X/G24K0/0A1V/V	5	10 day(s)

GoTo Focused Delivery Program: Proportional Electronics

VT-VRRA - Analog Amplifier

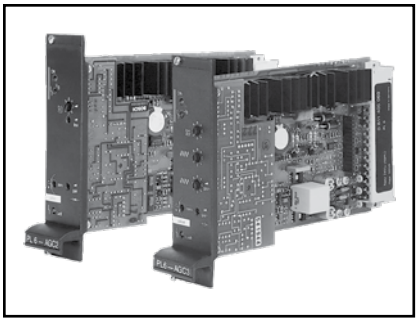

The amplifier VT-VRRA1 controls standard servo solenoid valves with DC-LVDT feedback for direct operated 4WRPH..L-2X and 2-stage 4WRL..-3X. These are basic amplifiers. Since these components are normally used in closed loop applications, other features like ramp, time, and spool compenstion (jump) are not needed.

For complete engineering and design information: ***GoTo www.boschrexroth-us.com/gotoelectronics***

Features

- Analog amplifiers in Eurocard format
- Controlled output stage
- Enable input
- Short-circuit-proof outputs
- Adjustment options: Valve zero point
- Cable break detection for actual value cable
- Closed-loop position control with PID characteristics

Technical Data

Operating voltage	*U*	VDC	24
Command value, depending on type	*U*	V	0 to 10, ±10
Type of connection			32-pin male connector, Form F
Card dimensions		mm (in.)	Eurocard 100 x 160 (3.4 x 6.3), DIN 41494
Ambient temperature range	ϑ	°C (°F)	0 to +70 (0 to +158)

Type	Suitable for valve type	Detailed information:
VT-VRRA1-527-2X/V0	4WRPH 6 … L-2X	RE30041
VT-VRRA1-527-2X/V0/2STV	4WRL … M-3X; 3WRCB, NG25 to 50	RE30045
VT-VRRA1-537-2X/V0	5WRPH10…L-2X	RE30041

Part Number	Description	Max. Quantity	Shipment (Business Days)
0811405060	VT-VRRA 1-527-20/V0	5	10 day(s)
0811405063	VT-VRRA 1-527-20/V0/2STV	5	10 day(s)

GoTo Focused Delivery Program: Proportional Electronics

VT-VARAP1 - p/Q Amplifier

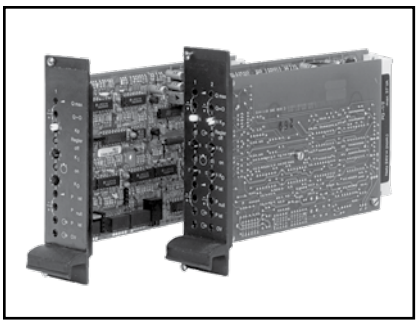

The p/Q amplifier is comprised of a base card with front panel containing the valve amplifier for 4WRPH6 with closed loop pressure controller. When used with the ppropriate servo solenoid valves and pressure sensors, this unit can be employed for controlling flow and pressure in a closed-loop control circuit. The input parameters are the setpoints for pressure p and flow Q. Pressure and valve spool position are transmitted as feedback values.

For complete engineering and design information: ***GoTo www.boschrexroth-us.com/gotoelectronics***

Features

- Suitable for actuating directly operated and pilot operated servo solenoid valves
- Analog amplifiers in Eurocard format for installation in 19" rack
- Output stage with closed-loop control
- Rapid energizing and de-energizing for fast response times
- Enabling input
- Short-circuit-proof outputs
- External control shutoff
- Open-circuit detection for feedback signal cable and pressure sensor
- Suitable for pressure sensors (1...6 V, 0...10 V, 4...20 mA)
- Closed-loop position control with PID action

Technical Data

P.C.B. format (W x L x H) mm (in.)	100 x 160 x ~35 (3.93 x 6.29 x ~1.38) Europe format with front panel (7 modular spacings)
Plug connector	Connector DIN 41612 – F 32
Power supply – U_B to Z2 – b2	24 V DC
Power consumption (typical)	37 W
Input signal (setpoint Q)	b 20: 0...+10 V; z 20: 0...+10 V – Difference amplifier (R_i = 100 kΩ)
Input signal (setpoint p)	z 12: 0...10 V; z 10: 0 V – Difference amplifier
Feedback signal from pressure sensor	z 14: 4...20 mA current input; b 16: 0...+10 V / 1...+6 V voltage input; b 18: 0 V reference

Type	Suitable for valve type
VT-VARAP1-527	4WRPH6

Part Number	Description	Max. Quantity	Shipment (Business Days)
0811405152	VT-VARAP1-527-20/V0	5	10 day(s)

GoTo Focused Delivery Program: Proportional Electronics

VT-HACD-3 - Control Electronics

The VT-HACD-3-2X closed-loop control electronics is a module that is installed on a top hat rail. A microcontroller controls the entire process, makes adjustments, establishes links and realizes the closed control loops. Data for configuration, command values and parameters are stored in a FLASH in a non-volatile form.

For complete engineering and design information: ***GoTo www.boschrexroth-us.com/gotoelectronics***

Features

- Use as command value card for generating, linking and normalizing signals
- Use as controller card for closed loop control with PIDT1 controller and optional state feedback
- Alternating control possible (e.g. position control with superimposed pressure control)
- Configurable analog and discrete I/O
- Digital SSI or incremental position measuring system
- Possibility of sequence control through block call-ups with command values, ramp times and controller parameters
- PC software BODAC for configuration, parameterization and diagnostics
- Field bus systems: PROFIBUS DP or EtherNet IP

Technical Data

Operating voltage	VDC	24
Command value signal	V	0 to 10; +/–10
	mA	0 to 20; 4 to 20
Output signal	V	0 to 10; +/–10
	mA	0 to 20; 4 to 20
Scanning time	m/sec	2
Serial interface		RS 232
Installation		DIN Rail mount
Dimensions	mm (in.)	120 x 55 x 118 (4.72 x 2.17 x 4.65) compact module
Ambient temperature range	°C (°F)	0 to +50 (0 to +122)

Part Number	Description	Max. Quantity	Shipment (Business Days)
R901239535	VT-HACD-3-2X/E-I-00/000	5	10 day(s)

GoTo Focused Delivery Program: Proportional Electronics

VT-5041-3X - Analog Amplifier

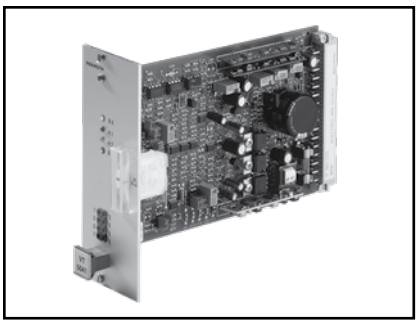

VT5041-3X analog amplifiers are designed as plug-in cards in Euroformat. They are external control electronics for the SYDFE1 control of A10VSO axial piston pumps analog amplifier.

For complete engineering and design information: ***GoTo www.boschrexroth-us.com/gotoelectronics***

Features

- Differential amplifier input
- Controller for valve spool position
- Minimum generator for pressure and swivel angle controller
- Self-clocking output stage
- Pressure-related leakage compensation (can be switched off)
- Polarity reversal protection for power supply
- Switchable actual pressure value input (current, voltage, range)

Technical Data

Operating voltage	U_O	VDC	24 + 40% – 10%
Power consumption	P_S	VA	35
Current consumption	I	A	0.6 (I_{max} = 1.25 A)
Type of connection			32-pin male connector, DIN 41612, form D
Card dimensions			Euro-card 100 x 160 mm, DIN 41494
Permissible operating temperature range		°C (°F)	0 to +50 (0 to +122)
Storage temperature range		°C (°F)	–20 to +70 (–4 to +158)

Type	Suitable for pump types
VT-5041-3X/1-0	SYDFE1 control of A10VSO
VT-5041-3X/3-0	SYDFE1 control of A10VSO with power limitation

Part Number	Description	Max. Quantity	Shipment (Business Days)
R901236404	VT 5041-3X/1-0	5	10 day(s)
R901196678	VT 5041-3X/3-0	5	10 day(s)

GoTo Focused Delivery Program: Proportional Electronics

VT-VRPA1-100 - Analog Amplifier

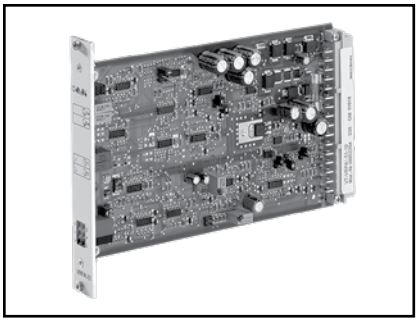

This analog amplifier is suitable for controlling direct operated proportional pressure control valves with electrical position feedback.

For complete engineering and design information: ***GoTo www.boschrexroth-us.com/gotoelectronics***

Features

- Component series 1X
- Suitable for controlling direct operated proportional pressure control valves with electrical position feedback, type DBETR, and proportional flow control valves with electrical position feedback, type 2FRE.
- Plug-in connections compatible with those of amplifier types VT 5003, VT 5004 and VT 5010
- Power supply with raised zero point
- Detailed information: RA30118

Technical Data

Operating voltage		U_B	24 VDC + 40% – 20%
Operating range: – Upper limit value – Lower limit value	 $u_B(t)_{max}$ $u_B(t)_{min}$	 V V	 35 22
Power consumption	P_S	W	< 35
Current consumption	I	A	< 1.5
Type of connection			32-pin blade connection, DIN EN 60603-2, Form D
Card dimensions		mm	100 x 160
Front plate dimensions	Height	mm	3 HE (128.4)
	Width solder side	mm	
	Width component side	mm	
Admissible operating temperature range		°C	0 to +50
Storage temperature range		°C	–25 to +70
Weight		m	0.15 kg

Part Number	Description	Max. Quantity	Shipment (Business Days)
R901009038	VT-VRPA1-100-1X/V0/0	3	10 day(s)

GoTo Focused Delivery Program: Proportional Electronics

VT-SSPA1-508 - Plug-in Amplifier

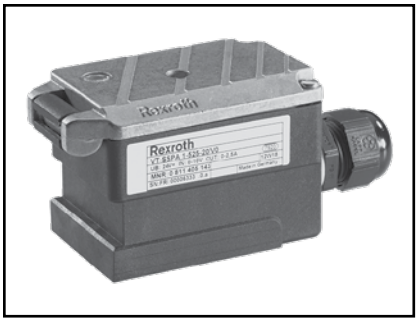

This plug-in amplifier is used for controlling proportional valves without position control.

For complete engineering and design information: ***GoTo www.boschrexroth-us.com/gotoelectronics***

Features

- Component series 2X
- Analog amplifier for controlling proportional valves (pressure and directional valves) without position control
- Differential input
- Ramp time adjustable (60 ms...5 s)
- Sensitivity, valve zero point, dither frequency adjustable
- Operating voltage 24 V
- Detailed information: RE30264

Technical Data

Supply voltage nom. 24 V =	Solenoid 2.5 A		Battery voltage 10.2...31 V Rectified voltage 10.2...27 V
	Solenoid 0.8 A		Battery voltage 21...31 V Rectified voltage 21...27 V
	Residual ripple		< 2 VSS
Power consumption max.		VA	55 (see valve data)
Ramp time			60 ms...5 s
Dither frequency range		Hz	95...340
Special features			LED (green): Supply voltage is available, Clocked output stage, Fast energization for short actuating times, Adjustments via trimming potentiometer
Protection class			IP 65, in plugged condition
Design			Connector housing
Connections	– Solenoid – UB, command value		DIN 43650 Cable 5x0.75 mm2, shielded (incl. PE)
Ambient temperature		°C	–20...+70
Storage temperature range		°C	–20...+85
Weight		m	0.23 kg

Part Number	Description	Max. Quantity	Shipment (Business Days)
0811405144	VT-SSPA1-508-2X/V0/0	3	10 day(s)

GoTo Focused Delivery Program: Proportional Electronics

VT-VACAP-500-20/V0 - p/Q Controller

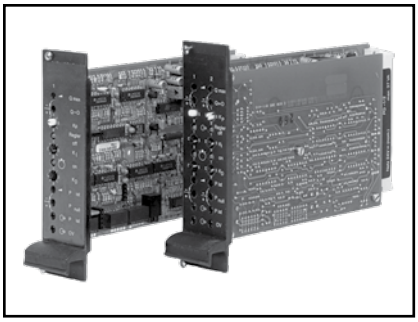

The input parameters for the card comprise the setpoint value for valve position, the setpoint value for pressure, the actual (feedback) pressure and any control mode signals. The pressure sensors with voltage interface receive their voltage supply from the card (z6/z8). Cards are for the connection of pressure sensors with both voltage and current signals. The setpoint value for pressure is selected via potentiometer. The potentiometers can be supplied from the card (z32/b12). Test connections in the front plate and on the card are available for monitoring and compensation tuning of the most important parameters.

For complete engineering and design information: ***GoTo www.boschrexroth-us.com/gotoelectronics***

Features

- Analog amplifiers in Europe card format for installation in 19 rack
- Suitable for servo solenoid valves with on-board electronics
- Closed-loop position control with PID action
- Short-circuit-proof outputs
- External deactivation for pressure controller
- Suitable for pressure sensors (1...6 V, 0...10 V, 4...20 mA)
- Supply for pressure sensors
- Detection of open circuit to pressure sensors
- For valves with on board electronics (OBE)

Technical Data

P.C.B. format (W x L x H)	mm (in.)	100 x 160 x ~35 (3.93 x 6.29 x ~1.38) Europe format with front panel (7 modular spacings)
Plug connector		Connector DIN 41612 – F 32
Ambient temperature	°C (°F)	operating temperature: 0 to +70 (32 to +158), storage temperature: –20 to +70° (–4 to +158)
Current rating		0811405157 max. 160 mA

Part Number	Description	Max. Quantity	Shipment (Business Days)
0811405157	VT-VACAP-500-20/V0	5	10 day(s)

GoTo Focused Delivery Program: Proportional Electronics

HM20 - Pressure Transducer for Hydraulic Applications

The HM20 measures pressure and output voltage or current. It is suitable for closed loop (feedback) and most industrial applications.

For complete engineering and design information: ***GoTo www.boschrexroth-us.com/gotoelectronics***

Features

- Measuring pressures in hydraulic systems
- Conversion of the measured pressure into a standardized electric analog signal
- Sensor with thick-film measuring cell
- Components that are in contact with the media are of stainless steel
- Operational reliability due to high bursting pressure, reverse polarity, overvoltage and short-circuit protection
- Compact design
- Very good temperature behavior
- Accuracy class 0.5
- 4-pin M12 connector at the housing
- Hydraulic port G1/4A
- Protection class IP65/IP67
- UL approval; CE approval
- Detailed information: RE30270, RE30272

Technical Data

Operating voltage Residual ripple	U_S U_{PP}	16 to 36 VDC 2.5 V (40 to 400 Hz)		
Current consumption	I_{max}	6 mA (with voltage output)		
Measurement range	p_N – bar (PSI)	100 (1450)	250 (3600)	400 (5800)
Output signal and admissible load R_A	I_{Sig} U_{Sig}	4 to 20 mA, two-wire, $R_A = (U_S - 8.5\ V) / 0.02\ A$ with R_A in Ω and U_S in V 0.1 to 10 V, three-wire, $R_A > 20$ kΩ		
Accuracy		<0.5% Related to the complete measurement range, including non-linearity, hysteresis, zero point and end value deviation (corresponds to the measuring deviation according to IEC 61298-2)		
Temperature coefficient (TK) in the nominal temperature range for zero point and range		< 0.1% / 10 K		
Hysteresis		< 0.15%		
Non-repeatability		< 0.10%		
Setting time (10 to 90%)	t	< 1 ms		
Service life		40 million load cycles or 40000 h		
Shock resistance, mechanical		15 g according to IEC 60068-2-27		
Vibration resistance in case of resonance		10 g according to IEC 60068-2-6		
Electromagnetic compatibility (EMC)		DIN EN 61326-2-3		

Part Number	Description	Max. Quantity	Shipment (Business Days)
R901342026	HM 20-2X/250-C-K35	5	10 day(s)
R901342027	HM 20-2X/250-H-K35	5	10 day(s)

GoTo Focused Delivery Program: Mobile Electronics

BODAS RC Controller

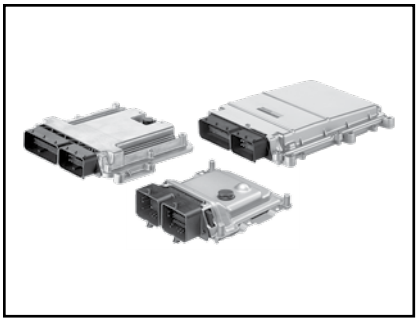

The BODAS controllers RC are used for the programmable control of proportional solenoids and additional switching functions. They can therefore be used for both simple and complex open- or closed-loop controls, e.g. for hydrostatic travel drives, working hydraulics or transmission control in mobile working machines. BODAS controllers RC were specially developed for use in mobile working machines, and satisfy the relevant safety requirements with regard to ambient temperature, moisture, resistance to shock and vibration, as well as electromagnetic compatibility (EMC).

For complete engineering and design information: ***GoTo www.boschrexroth-us.com/GoToMobileElectronics***

Features

- Component of BODAS system for mobile applications
- Robust design meeting specifications for mobile applications
- High electromagnetic compatibility (EMC)
- Inputs and outputs with fault detection
- Safety features such as redundant inputs and
- central safety cut-off for all outputs
- Pulse-width-modulated (PWM) solenoid currents for minimum hysteresis
- Closed-loop control of solenoid currents, i.e. not dependent on voltage and temperature
- Sturdy, sealed aluminum housing
- Detailed information: RE95201 (RC2-2), RE95205 (RC4-5), RE95204 (RC12-10)

Technical Data

Type/Series		RC4-5/30	RC12-10/30	RC28-14/30
Nominal voltage		12 and 24 V		
Supply voltage		8 to 32 V		
Total inputs		30	75	75
Max. input functions				
	Analog	8	55	55
	Digital	16	74	74
	Frequency	8	10	10
	DSM	2	5	5
	Temperature	4	4	4
Outputs				
	Proportional solenoid (PWM)	4	12	28
	Digital	5	10	14
	Analog	1	5	5
Interfaces				
	RS232	–	–	–
	CAN 2.0 B	2	4	4
Operating temperature		-40 to +85 °C (-40 to +221 °F)		

Part Number	Description	Max. Quantity	Shipment (Business Days)
R917010287	CONTROL UNIT RC10-10/31	2	5 day(s)
R917008181	RC12-10/30 (un-programmed)	5	5 day(s)
R917007683	RC28-14/30 (un-programmed)	2	5 day(s)
R917008015	RC4-5/30 (un-programmed)	2	5 day(s)

GoTo Focused Delivery Program: Mobile Electronics

BODAS Tools

The BODAS-service PC software tool provides a convenient and user friendly method of executing service functions for BODAS controllers from Rexroth. Parameters can be displayed and edited, process variables displayed, and their values graphically plotted and recorded. In addition, error messages and configurable diagnostics are provided.

For complete engineering and design information: ***GoTo www.boschrexroth-us.com/GoToMobileElectronics***

Features

- User-friendly Windows user interface, freely configurable work flow and online help
- Simultaneous display of multiple parameters for modification settings
- Simultaneous display of multiple process variables in graphical or numeric form
- Printout of all settings and process variables for documentation purposes
- Clear and easy-to-understand display of error messages
- Easy-to-use data logger: Save measured values (process variables and parameters) to the hard disk
- Selectable and expandable program language
- Adjustable device language (relevant to controller data, up to 4 languages available)
- Diagnosis configurations for simplified troubleshooting
- Detailed information: RE95086

Technical Data

- Operating System:
  - Windows Vista
  - Windows 7 (only for BODAS-service. Not available for FT2 and BO-DEM)
- One free serial or CAN interface (depending on selected communications interface)
- One free USB interface (for license key - USB dongle)
- Available hard disk capacity > 200 MB
- Java runtime environment (installation occurs automatically)

Part Number	Description	Max. Quantity	Shipment (Business Days)
R902109422	BODAS Cable	1	5 day(s)
R909831291	BODAS Service Diagnostic Connector	1	5 day(s)
R902109416	BODAS Service Tool Full	1	5 day(s)
R902602780	CAN-USB interface	1	5 day(s)

GoTo Focused Delivery Program: Mobile Electronics

BODAS Sensors & Connectors

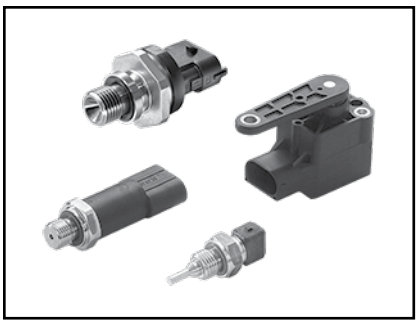

Rexroth BODAS sensors measure different variables such as temperature of fluids, circuit pressure, angle of rotation, and position which provide vital information to mobile hydraulic systems. As a component of the BODAS system, these elements are designed to withstand high ambient loads, external vibrations and impact, and harmful fluids that are encountered in mobile applications.

For complete engineering and design information: ***GoTo www.boschrexroth-us.com/GoToMobileElectronics***

Features

- Harmonized to BODAS controllers and hydraulic components
- High temperature range
- Resistant to shock and vibration
- High electromagnetic compatibility
- Robust casing with high IP degree of protection
- Detailed information: RE95160 (PO1), RE95155 (PR3), RE95140 (WS1), RE95180 (TSF)

Technical Data

Type	Measures	Measurement range	Input current (max.)	Protection class (with mating plug)	Plug connection	Application (typical)
TSF	Temperature	–40 °C to 150 °C	5 mA	IP64A	Jet connector, 2-pin	Enables the measurement of pressurized fluid temperatures of coolants, hydraulic oil or motor oil in vehicles.
TSA	Air Temperature	–40 °C to 150 °C	5 mA	IP64	Jet connector, 2-pin	Temperature measurement of the ambient air and charge air in vehicles
PR4	Pressure	0 to 420 bar	12 mA	IP67 and IP69K	Compact 1.1a connector, 3-pin	For the measurement of pressure within hydraulic circuits, ideally suited for mobile applications.
WS1	Angle	–45°...+45°	11 mA	IP69K	AMP MQS, 6-pin	For the measurement of rotary move-ments of an adjusting shaft or angle of levers to determine the setting of diesel injection pump levers.

Part Number	Description	Max. Quantity	Shipment (Business Days)
R917009890	PLUG SET BOSCH KOMPAKT-STECKE	2	5 day(s)
R902602132	PR3 Mating Connector	2	5 day(s)
R917008824	PR3-400GS05/10	2	5 day(s)
R917008825	PR3-600GS05/10	2	5 day(s)
1834484094	TS Mating Connector	2	5 day(s)
0538009203	TSA Air Temperature Sensor	2	5 day(s)
0538009252	TSF Temperature Sensor	2	5 day(s)

GoTo Focused Delivery Program: Mobile Electronics

BODAS Display - Display DI4

The BODAS DI4 display series is a robust and high-resolution color display for use in mobile working machines. The display has a 7-inch screen (800 x 480 pixels) and enables direct connection to two video cameras, e.g. working space and rear view cameras. In addition to two CAN bus interfaces, the DI4 has various analog inputs and outputs, as well as an USB interface for fast data exchange. In conjunction with the integrated BODAS-service communication interface, the DI4 serves as a central access point to the CAN bus network of the machine and allows full diagnostic and flash updates for connected BODAS RC controllers.

For complete engineering and design information: ***GoTo www.boschrexroth-us.com/GoToMobileElectronics***

Features

- iMX6 Solo processor, 800 MHz
- 2 GB flash memory and 256 MB RAM
- Large number of integrated interfaces as well as inputs and outputs: 2× CAN 2.0B, 1× USB 2.0, 3× digital/ analog inputs, 2× digital outputs, 2× analog video inputs (PAL, NTSC)
- Integrated ambient light sensor
- Free programming as well as individual visualization and allocation of functions through CODESYS development environment
- Improved ease of use by ergonomic design
- Flexible application and integration options
- Diagnosis, parameterization and flashing of BODAS controllers without additional service tools
- Detailed information: RE95272

Technical Data

BODAS DI4 Display	
Nominal voltage	12 V and 24 V
Supply voltage	9...32 V
Power consumption	16 W
Interfaces	
CAN 2.0 B	2
USB 2.0	via wiring harness
Ethernet 10/100 Mbit/s	Fitted (DI4-M-PRO model only)
Display	800 x 480 pixel, 256k resolution
Camera voltage supply	12 V max. 500 mA
Operating system	Linus + CodeSys RTS
Programming platform	CodeSys V3.5

Part Number	Description	Max. Quantity	Shipment (Business Days)
R917010017	CONNECTION PLUG DI4-MAIN-CONNECTOR-S	1	10 day(s)
R917010009	DISPLAY DI4-M-PRO/10	1	10 day(s)
R917010008	DISPLAY DI4-M-STD/10	1	10 day(s)

GoTo Focused Delivery Program: Mobile Electronics

BODAS Display - Color Video Camera

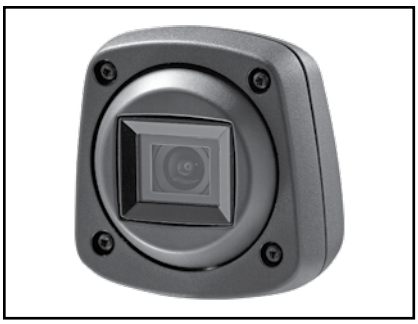

The BODAS color video camera, in combination with the BODAS DI4 display, facilitates the display of images from the work area or rearward area of a machine. Thanks to the high-quality optics and the CMOS image sensors, the BODAS cameras supply a high-quality and distortion-free image, even in the event of direct sunlight, and can be rendered reflected if necessary.

For complete engineering and design information: ***GoTo www.boschrexroth-us.com/GoToMobileElectronics***

Features

- Robust design for use in mobile equipment (IP69k)
- Flexible clamp for universal mounting
- Opening angle of 100° or 120°, horizontal
- High light sensitivity for use even at twilight
- Distortion-free picture display
- Integrated, self-activating heater
- Detailed information: RE95280

Technical Data

CAM-PRO/10	
Image sensor	1/4" CMOS
Signal format	NTSC
Image reproduction	525 lines, 60 images/sec
Illumination (min.)	0.5 Lux
Resolution	> 300 lines
Lens	Standard optics w/ image correction
Horizontal opening angle	100°
Vertical opening angle	85°
Nominal voltage	12 V and 24 V
Supply voltage	9...36 V
Power input	
Heating off	Approx. 1 W
Heating on	Approx. 4 W
Operating temperature	–40 °C...+85 °C

Part Number	Description	Max. Quantity	Shipment (Business Days)
R902603837	CAM-PRO/10 Camera	2	10 day(s)
R902603838	CAM-XXX/10 Mating Cable	2	10 day(s)

GoTo Focused Delivery Program: Mobile Electronics

RA - Analog Amplifier

The analog amplifier activates up to two proportional solenoids. The specified control voltage is processed in the amplifier as an input command signal. The analog amplifier provides a regulated electric current as an output signal for actuation of proportional solenoids.

For complete engineering and design information: ***GoTo www.boschrexroth-us.com/GoToMobileElectronics***

Features

- The electronic analog amplifier operates up to two proportional solenoids and a switching function
- Optional interlock of actuation for proportional solenoids
- Supply voltage for external set point potentiometer
- Monitoring of set point potentiometer for cable breakage and short circuit
- Externally actuated switching output
- Error output
- Separately adjustable ramp times
- Overload protection, over-voltage protection, conditional short-circuit protection
- Separately adjustable Imin and Imax for every solenoid
- Externally adjustable PWM frequency
- Detailed information: RE95230

Technical Data

		RA2-1
Nominal Voltage	12 and 24 V	
Residual ripple (DIN 40839, Section 1)	max. ± 2 V	X
Supply voltage, perm, range	10 … 32 V	
Current Consumption		
without load	mA	150
with load, max.	A	6
Fuse		
external: for switching and proportional solenoid outputs and for electronics	A T	7.5
Potentiometer Supply Voltage	0 V, 4.0 V	X
(for setpoint potentiometer 2 … 5 kΩ)	7.2 V … 8.4 V (depending on load)	
Voltage Input (differential amplifier)	4.0 V	2
(Setpoint voltage)		
Switch Input	> 5.0 V	1
Proportional Solenoid Outputs (PWM)		
Current range	0…2.3 A	2
Pulse frequency	100, 200 or 350 Hz	

Part Number	Description	Max. Quantity	Shipment (Business Days)
R902603063	RA Amplifier 25 Pin Mating Connector	2	5 day(s)
R902091800	RA2-1/10 Dual Solenoid Amplifier	2	5 day(s)

GoTo Focused Delivery Program: Mobile Electronics

BODAS Connectors & Wire Kits

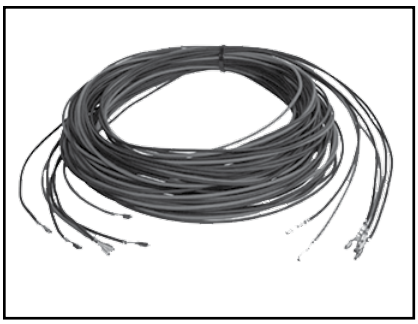

BODAS connector and wire kits are designed to help you quickly and easily realize prototypes with RC controllers. There are three types of kits available in the GoTo program - Connector, Wire, Contacts. The assembly tools needed for these kits are also available through the GoTo program.

For complete engineering and design information: ***GoTo www.boschrexroth-us.com/GoToMobileElectronics***

Features

- Connector kits, preassembled wire kits, and contact kits for RC (Series-30)
- Connector kits, preassembled wire kits, and contact kits for RC4-5
- Bosch assembly tools
- Detailed information: RA95475

BODAS Wire Kits

Series 30 controllers, except RC4-5

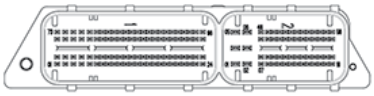

Material No.	Designation	Description	Wire Gauge	Length (m)
R978730358	BWK1-18-2-10BK	Signal wire – use on PINS 101-196, 207-258	18	2
R978730359	BWK1-16-10-2BK	Ground wire – use on PIN 202	16	10
R978730360	BWK2-16-2-3RD	Power wire – use on PINS 201, 203–206	16	2
R978730656	BWK2-16-2-1BK	Ground wire - use on PIN 202	16	2

Series 30 controllers, RC4-5

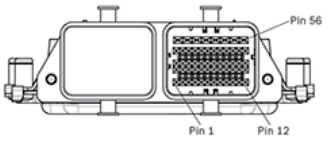

Material No.	Designation	Description	Wire Gauge	Length (m)
R978730362	BWK3-18-2-10BK	Signal wire – use on PINS 1–48	18	2
R978730363	BWK3-18-5-4BK	Signal wire – use on PINS 53–56	18	5
R978730364	BWK4-18-5-4BK2RD	Ground wire – use on PINS 51–52 Power wire – use on PINS 49–50	18	5

See RA 95475 for more details.

BODAS Connectors

Material No.	Designation	Description	Options	Controller
R978730365	BCK1-96-L	96 pin carrier, pin lock, pin cover	BCK1-96-CONTACTS – BWK1-18-2-10BK	Series 30 (not 4-5)
R978730366	BCK1-58-R	58 pin carrier, pin locks, pin cover	BCK1-58-CONTACTS – BWK1-18-2-10BK – BWK1-16-10-2BK – BWK2-16-2-3RD	Series 30 (not 4-5)
R978730367	BCK2-56-R	56 pin carrier, pin locks, pin cover, holding plate	BCK2-56-CONTACTS – BWK3-18-2-10BK – BWK3-18-5-4BK – BWK4-18-5-4BK2RD	Series 30 (4-5)

See RA 95475 for more details.

BODAS Contact Kits

See RA 95475 for more details.

Material No.	Description	Connector	Explanation
R978057364	BCK1-58-CONTACTS	BCK1-58-R	58 un-crimped pins for Series 30 controller connector (except RC4-5)
R978057363	BCK1-96-CONTACTS	BCK1-96-L	96 un-crimped pins for Series 30 controller connector (except RC4-5)
R978057365	BCK2-56-CONTACTS	BCK2-56-R	56 un-crimped pins for RC4-5 Series 30 controller connector

See RA 95475 for more details.

BODAS Connection Kit Tools

See RA 95475 for more details.

Material No.	Designation	Description
R913045758	Extract Tool, BCB 0.6	Extraction Tool (BCB 0.6 contact)
1928498218	Extract Tool, BDK 2.8	Bosch Extraction Tool (BDK 2.8 contacts)
1928498167	Extract Tool, Matrix 1.2	Bosch Extraction Tool (Matrix 1.2 contacts)
R913045760	Extract Tool, MQS	Extraction Tool (AMP MQS)

See RA 95475 for more details.

Part Number	Description	Max. Quantity	Shipment (Business Days)
R978057364	BCK1-58-CONTACTS	2	5 day(s)
R978730366	BCK1-58-R	2	5 day(s)
R978057363	BCK1-96-CONTACTS	2	5 day(s)
R978730365	BCK1-96-L	2	5 day(s)
R978057365	BCK2-56-CONTACTS	4	5 day(s)
R978730367	BCK2-56-R	4	5 day(s)
R978730359	BWK1-16-10-2BK	2	5 day(s)
R978730358	BWK1-18-2-10BK	4	5 day(s)
R978730364	BWK1-18-2-10BK	2	5 day(s)
R978730656	BWK2-16-2-1BK	5	5 day(s)
R978730360	BWK2-16-2-3RD	2	5 day(s)
R978730362	BWK3-18-2-10BK	4	5 day(s)
R978730363	BWK3-18-5-4BK	2	5 day(s)
R978060039	CONNECTING KIT BCK3-94-R	2	5 day(s)

GoTo Focused Delivery Program: Mobile Electronics

Discontinued - BODAS Node Kits

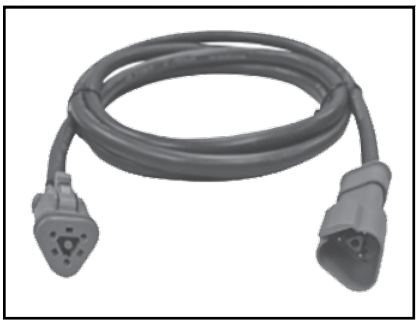

BODAS Node Kits are designed to help you quickly and easily realize prototypes with Rexroth Controllers (Series-30).
There are five types of node kits provided (CAN, Extension, Termination, Service), and also a DI3 (PWG/GND) node kit.

For complete engineering and design information: ***GoTo www.boschrexroth-us.com/GoTomobileelectronics***

Features

- CAN Node cable (un-terminated)
- CAN Node cable (S30, not RC4-5)
- CAN Node cable (S30, RC4-5)
- CAN Node cable (DI-3 display)
- CAN Extension cable (2, 5, 10ft.)
- CAN Termination Kit
- CAN to Bodas-service Cable
- DI3 Display power/ground Cables

CAN-Node Kit

CAN-Node Kits include the connector and wires needed to connect to the Bosch connector, and communicate via CAN with the Rexroth controllers.

Designation	Description	Length	Series	Material No.
Bodas Node CAN-0	Un-terminated	2 ft.		**R978058208**
Bodas Node CAN-1	Matrix 1.2	2 ft.	30 (not RC4-5)	**R978058209**
Bodas Node CAN-3	BCB 0.6	2 ft.	30 (RC4-5 only)	**R978058210**
Bodas Node CAN-5	DT04-3S	2 ft.	10, 11 (DI-3)	**R978058211**

CAN-Node Extension Kit

CAN-Node Extension Kits come in four different lengths and can be used in conjunction with the CAN-Node Kits to extend the length of the CAN cable.

Designation	Description	Length	Series	Material No.
Bodas Node EXT2	3 Pin Deutsch	2 ft.	SAE J1939/11	**R978058213**
Bodes Node EXT5	3 Pin Deutsch	5 ft.	SAE J1939/11	**R978058214**
Bodas Node EXT10	3 Pin Deutsch	10 ft.	SAE J1939/11	**R978058215**

CAN-Node Termination Kit

CAN-Node Termination Kits include several standard items used in terminating the CAN-bus, both male and female, as well as a splitter in order to accommodate the above Nodes.

Designation	Description	Connector	Material No.
Bodas Node KIT	SAE J1939/11	Deutsch	**R978058299**

CAN-Node Service Kit

The CAN-Node Service Kit includes the connector and wires needed to connect the CAN-bus with a CAN-USB adapter for use with the Bodas-service tool.

Designation	Description	Connector	Material No.
Bodas Node SERVICE	SAE J1939/11	9 Pin-D to 3 Pin Deutsch	**R978058300**

DI3 (PWR/GND) Node Kit

The DI3 (PWR/GND) Node Kit includes two additional wires needed to supply power and ground to the NODE_CAN-5 cable for the Rexroth DI-3 display.

Designation	Description	Connector	Material No.
Bodas Node DI3-PWR-GND	Crimped Red/Blk Wires	Deutsch	**R978058212**

Part Number	Description	Max. Quantity	Shipment (Business Days)

GoTo Focused Delivery Program: Mobile Controls

2TH6 - Single-axis hydraulic pilot controllers

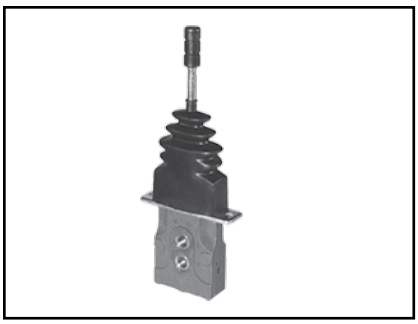

Hydraulic pilot control units of the type 2TH6 operate on the basis of direct operated pressure reducing valves. Pressure in the relevant control port is proportional to the stroke of the control lever. This pressure control as a function of the control lever position and the characteristics of the control spring enables the proportional hydraulic control of directional valves and high response control valves for hydraulic pumps and motors.

For complete engineering and design information: ***GoTo www.boschrexroth-us.com/gotomacontrols***

Features

- Precise and play-free control characteristics
- Low actuation force at the lever
- Rust-free plunger
- Stackable single axis controllers, up to 6 controllers in one assembly
- Lever operator available “L” spring center, “P” friction detent, or “M” 3-position detent available
- Standard die-cast aluminum base or cast iron base for marine or underground applications
- Detailed information: RE64552
-

Technical Data

2TH6		
Inlet pressure (max.)	bar (PSI)	50 (725)
Control flow (max.)	l/min (GPM)	16 (4.2)

Part Number	Description	Max. Quantity	Shipment (Business Days)
R907225176	1-2 TH6 L 06-10/M 05	3	10 day(s)
R908352025	1-2 TH6 L 97-10/M 05	3	10 day(s)
R907225383	1-2 TH6 M 06-10/M 05	3	10 day(s)
R907223668	1-2 TH6 P 06-10/M 05	3	10 day(s)
R908352027	1-2 TH6 P 97-10/M 05	3	10 day(s)
R908353005	1-2 TH6 T 97-10/M 05	3	10 day(s)
R978728584	1-2TH6L06-1X/M05 SO418	3	10 day(s)
R907223719	2 TH6 L 06-10/M 05	3	10 day(s)
R907223721	2 TH6 M 06-10/M 05	3	10 day(s)
R907223723	2 TH6 P 06-10/M 05	3	10 day(s)

GoTo Focused Delivery Program: Mobile Controls

2TH7 - Hydraulic pilot controller

Hydraulic pilot controller, 2 ported with foot pedal actuation. Accurate and smooth actuator control provides linear output for optimum machine control.

For complete engineering and design information: ***GoTo www.boschrexroth-us.com/gotomacontrols***

Features

- Precise and play-free control characteristics
- Progressive, sensitive operation
- Detailed information: RE64558

Technical Data

2TH7Q		
Inlet pressure (max.)	bar (PSI)	50 (725)
Output signal pressure range	bar (PSI)	5.8 – 19 (84 – 276)
Control flow (max.)	l/min (GPM)	up to 20 (5.3)
Torque (max. permissible) at pedals	Nm (lb-ft)	20 (14.75)
Weight	kg (lbs.)	6.2 (13.66)

Part Number	Description	Max. Quantity	Shipment (Business Days)
R907142321	2TH7Q06-1X/M05	3	10 day(s)

GoTo Focused Delivery Program: Mobile Controls

4TH6 - Hydraulic pilot control for armrest installation

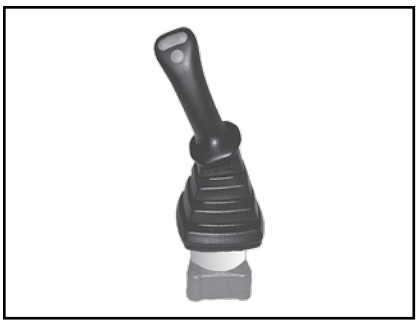

Hydraulic 4 ported pilot controller with joystick actuation. Accurate and smooth actuator control provides linear output for optimum machine control. Robust ergonomic joystick handle featuring double and single contact thumb rocker switch and one single contact trigger rocker switch for control of electrical on/off auxiliary control devices.

For complete engineering and design information: ***GoTo www.boschrexroth-us.com/gotomacontrols***

Features

- Progressive, sensitive operation
- Low actuation forces
- Several ergonomic grips with various E contacts
- All connections point downwards
- Detailed information: RE64555

Technical Data

4TH6		
Inlet pressure (max.)	bar (PSI)	up to 50 (725)
Output signal pressure range	bar (PSI)	5.8 – 19 (84 – 276)
Control flow (max.)	l/min (GPM)	up to 16 (4.2)
Torque (max. permissible) at lever	Nm (lb-ft)	10 (7.37) during operation
Weight	kg (lbs.)	2.6 (5.7)

Part Number	Description	Max. Quantity	Shipment (Business Days)
R907229581	4TH6E06-1X/YU23/M05	3	10 day(s)

GoTo Focused Delivery Program: Compact Hydraulics

Relief Valves - Relief, direct acting poppet type

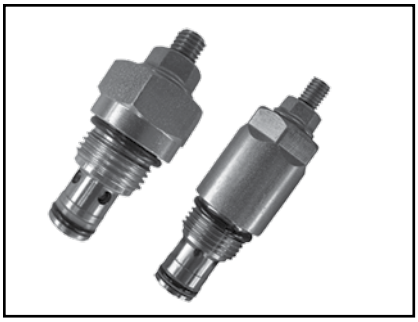

Flow is blocked from 1 to 2 until pressure increases to meet the selected valve setting, lifting the poppet from its seat and allowing relief flow through port 2 to tank. Pressure at port 2 is additive to the relief setting of the valve. The unique Bosch Rexroth Oil Control poppet design provides enhanced stability at all flows and pressures.

For complete engineering and design information: ***GoTo www.boschrexroth-us.com/GoTocompact***

Features

- Cavity:
- CA-08A-2N
- CA-10A-2N
- Detailed information: RE18318-04, RE18318-05

Relief, direct acting guided poppet type

Symbol	Type	Code	Max. Pressure PSI (bar)	Max. Flow GPM (L/min)	Cavity	Data Sheet
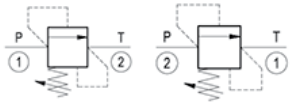	VSBN-08A	041149X56Z	5000 (350)	5 (20)	CA-08A-2N	RE 18318-04
	VSBN-10A	041155X85Z	5000 (350)	13 (50)	CA-10A-2N	RE 18318-05

Part Number	Description	Max. Quantity	Shipment (Business Days)
R901113598	041149035605000 VSBN-08A-05	10	10 day(s)
R901113599	041149035610000 VSBN-08A-10	10	10 day(s)
R901097728	041149035620000 VSBN-08A-20	10	10 day(s)
R901091914	041149035635000 VSBN-08A-35	10	10 day(s)
R901113601	041149735635000 VSBN-08A, Screw Adjust, 35-350 bar	10	10 day(s)
R901191831	041155038505000 VSBN-10A-05	10	10 day(s)
R901113609	041155038510000 VSBN-10A-10	10	10 day(s)
R901113610	041155038520000 VSBN-10A. 105-210 bar	10	10 day(s)
R901115702	041155038535000 VSBN-10A. 175-350 bar	10	10 day(s)

GoTo Focused Delivery Program: Compact Hydraulics

Relief Valves - Relief, direct acting poppet type, differential area

Flow is blocked from 2 to 1 until pressure increases to meet the selected valve setting, lifting the poppet from its seat and allowing relief flow through port 1 to tank. Pressure at port 1 is additive to the relief setting of the valve. The unique Bosch Rexroth Oil Control poppet design provides enhanced stability at all flows and pressures.

For complete engineering and design information: ***GoTo www.boschrexroth-us.com/GoTocompact***

Features

- Cavity:
- CA-08A-2N
- CA-10A-2N
- Detailed information: RE18318-02, RE18318-03

Relief, direct acting poppet type, differential area

Symbol	Type	Code	Max. Pressure PSI (bar)	Max. Flow GPM (L/min)	Cavity	Data Sheet
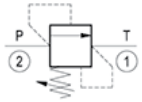	VSDN-08A	041522X56Z	5000 (350)	13 (50)	CA-08A-2N	RE 18318-02
	VSDN-10A	041523X85Z	5000 (350)	32 (120)	CA-10A-2N	RE 18318-03

Part Number	Description	Max. Quantity	Shipment (Business Days)
R930005640	041522035610000 VSDN-08A-10	10	10 day(s)
R930005641	041522035620000 VSDN-08A-20	10	10 day(s)
R930005642	041522035635000 VSDN-08A-35	10	10 day(s)
R930005643	041523038510000 VSDN-10A-10	10	10 day(s)
R930005644	041523038535000 VSDN-10A-35	10	10 day(s)

GoTo Focused Delivery Program: Compact Hydraulics

Relief Valves - Relief, pilot operated spool type

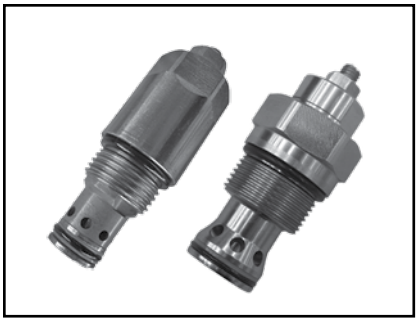

Flow is blocked from 1 to 2 until pressure increases to meet the selected valve setting, lifting the conical, pilot-stage poppet from its seat. This action exhausts oil above the main-stage piston (spool type), allowing it to shift and provide relief flow through 2 to tank. Pressure at 2 is additive to the relief setting of the valve.

For complete engineering and design information: ***GoTo www.boschrexroth-us.com/GoTocompact***

Features

- Cavity:
- CA-10A-2N
- CA-16A-2N
- Detailed information: RE18318-08, RE18318-10

Relief, pilot operated spool type

Symbol	Type	Code	Max. Pressure PSI (bar)	Max. Flow GPM (L/min)	Cavity	Data Sheet
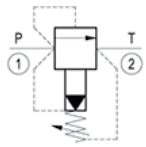	VSPN-10A	041208X85Z	6000 (420)	1-32 (3-120)	CA-10A-2N	RE 18318-08
	VSPN-12A	0412100357	6000 (420)	1.3-53 (5-200)	CA-12A-2N	RE 18318-09
	VSPN-16A	041211X27Z	6000 (420)	2-79 (8-300)	CA-16A-2N	RE 18318-10

Part Number	Description	Max. Quantity	Shipment (Business Days)
R901097726	041208038510000 VSPN-10A-10	10	10 day(s)
R901097722	041208038520000 VSPN-10A-20	10	10 day(s)
R901104103	041208038535000 VSPN-10A-35	10	10 day(s)
R930000335	041210035720000 VSPN-12A-20	10	10 day(s)
R930000336	041210035735000 VSPN-12A-35	10	10 day(s)
R930001026	041211032720000 VSPN-16A-20	10	10 day(s)
R930001027	041211032735000 VSPN-16A-35	10	10 day(s)

GoTo Focused Delivery Program: Compact Hydraulics

Relief Valves - Relief, pilot operated spool type with external drain

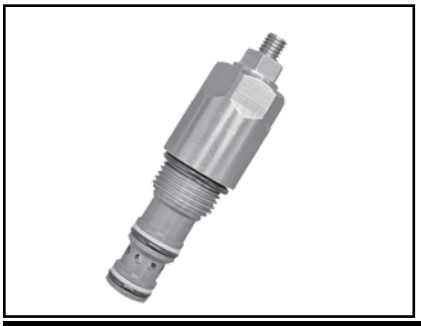

See Technical Data for more information.

For complete engineering and design information: ***GoTo www.boschrexroth-us.com/GoTocompact***

Features

- Cavity:
- CA-10A-3N
- CA-12A-3C
- Detailed information: RE18318-12, RE18318-13

Relief, pilot operated spool type, with external drain

Symbol	Type	Code	Max. Pressure PSI (bar)	Max. Flow GPM (L/min)	Cavity	Data Sheet
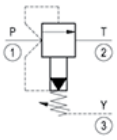	VSPY-10A	041305X85Z	6000 (420)	0.8-32 (3-120)	CA-10A-3N	RE 18318-12
	VSPY-12A	041307X57Z	5000 (350)	1.3-53 (5-200)	CA-12A-3C	RE 18318-13

Part Number	Description	Max. Quantity	Shipment (Business Days)
R901097730	041305038520000 VSPY-10A-20	10	10 day(s)
R930000356	041307035710000 VSPY-12A-10	10	10 day(s)

GoTo Focused Delivery Program: Compact Hydraulics

Relief Valves - Relief, bi-directional direct acting poppet type, differential area

See Technical Data for more information.

For complete engineering and design information: ***GoTo www.boschrexroth-us.com/GoTocompact***

Features

- Data Sheet: RE 18318-07

Relief, bi-directional direct acting poppet type, differential area

Symbol	Type	Code	Max. Pressure PSI (bar)	Max. Flow GPM (L/min)	Cavity	Data Sheet
	VSNG-10A	0411590385	3500 (240)	15 (56)	CA-10A-2N	RE 18318-07

Part Number	Description	Max. Quantity	Shipment (Business Days)
R901109726	041159038520000 VSNG-10A-20	10	10 day(s)

GoTo Focused Delivery Program: Compact Hydraulics

Relief Valves - Relief, pilot operated poppet type

See Technical Data for more information.

For complete engineering and design information: ***GoTo www.boschrexroth-us.com/GoTocompact***

Features

- Data Sheet: RE 18318-11

Relief, pilot operated poppet type

Symbol	Type	Code	Max. Pressure PSI (bar)	Max. Flow GPM (L/min)	Cavity	Data Sheet
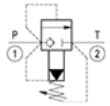	VSPC-10A	0412090385	5000 (350)	1-21 (3-80)	CA-10A-2N	RE 18318-11

Part Number	Description	Max. Quantity	Shipment (Business Days)
R930051168	04120903852000A VSPC-10A-20-A	10	10 day(s)

GoTo Focused Delivery Program: Compact Hydraulics

Pressure Reducing and Relieving Valves - Pressure Reducing, pilot operated spool type

See Technical Data for more information.

For complete engineering and design information: ***GoTo www.boschrexroth-us.com/GoTocompact***

Features

- Common cavity
- Size CA-10A-3N
- Size CA-12A-3N
- Detailed information: RE18318-50, RE18318-51

Pressure reducing, pilot operated spool type

Symbol	Type	Code	Max. Pressure PSI (bar)	Max. Flow GPM (L/min)	Cavity	Data Sheet
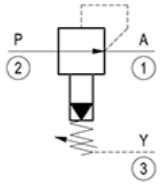	VRPP-10A	049306X85Z	5000 (350)	16 (60)	CA-10A-3N	RE 18318-50
	VRPP-12A	049308X57Z	5000 (350)	26 (100)	CA-12A-3N	RE 18318-51

Part Number	Description	Max. Quantity	Shipment (Business Days)
R901104112	049306038510000 VRPP-10A-10	10	10 day(s)
R901109737	049308035710000 VRPP-12A-10	10	10 day(s)
R901109738	049308035720000 VRPP-12A-20	10	10 day(s)

GoTo Focused Delivery Program: Compact Hydraulics

Pressure Reducing and Relieving Valves - Pressure Reducing and Relieving, direct acting spool type

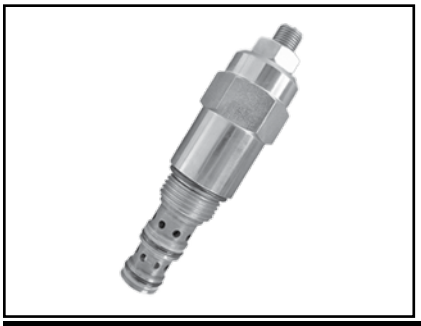

See Technical Data for more information.

For complete engineering and design information: ***GoTo www.boschrexroth-us.com/GoTocompact***

Features

- Common cavity
- Size CA-10A-3N
- Detailed information: RE18318-53

Pressure reducing and relieving, direct acting spool type

Symbol	Type	Code	Max. Pressure PSI (bar)	Max. Flow GPM (L/min)	Cavity	Data Sheet
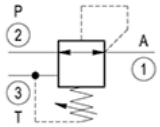	VRPR-10A	049504X85Z	5000 (350)	8 (30)	CA-10A-3N	RE 18318-53

Part Number	Description	Max. Quantity	Shipment (Business Days)
R901102333	04950403850400A VRPR-10A-04-A	10	10 day(s)
R901109742	04950403850800A VRPR-10A-08-A	10	10 day(s)

GoTo Focused Delivery Program: Compact Hydraulics

Pressure Reducing and Relieving Valves - Pressure Reducing and Relieving, pilot operated spool type

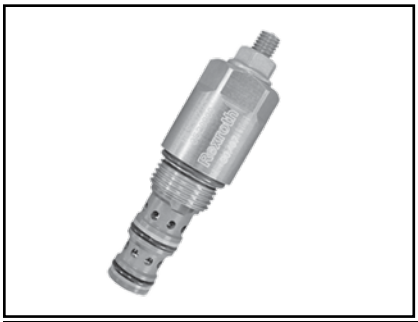

See Technical Data for more information.

For complete engineering and design information: ***GoTo www.boschrexroth-us.com/GoTocompact***

Features

- Common cavity
- Size CA-10A-3N
- Detailed information: RE18318-56

Pressure reducing and relieving, pilot operated spool type

Symbol	Type	Code	Max. Pressure PSI (bar)	Max. Flow GPM (L/min)	Cavity	Data Sheet
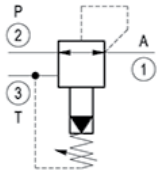	VRPX-10A	049307X85Z	5000 (350)	16 (60)	CA-10A-3N	RE 18318-56

Part Number	Description	Max. Quantity	Shipment (Business Days)
R901104118	049307038510000 VRPX-10A-10	10	10 day(s)

GoTo Focused Delivery Program: Compact Hydraulics

Check Valves - Common Cavity - Check, poppet type

When pressure at 1 rises above the spring bias pressure, the poppet is lifted and flow allowed from 1 to 2. The valve is closed (checked) from 2 to 1. Precision machining and hardening processes allow virtually leak-free performance in the checked condition.

For complete engineering and design information: ***GoTo www.boschrexroth-us.com/GoTocompact***

Features

- Common cavity
- Size CA-08A-2N
- Size CA-12A-2N
- Size CA-16A-2N
- Size CA-20A-2N
- Detailed information: RE18318-89, RE18318-90, RE18318-91, RE18318-92, RE18318-93

Check poppet type

Symbol	Type	Code	Max. Pressure PSI (bar)	Max. Flow GPM (L/min)	Cavity	Data Sheet
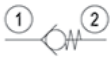	VUCN-08A	0431200056Z	6000 (420)	13 (50)	CA-08A-2N	RE 18318-89
	VUCN-10A	0431230085Z	5000 (350)	21 (80)	CA-12A-2N	RE 18318-90
	VUCN-12A	0431280057Z	5000 (530)	32 (120)	CA-12A-2N	RE 18318-91
	VUCN-16A	0431250027Z	5000 (350)	53 (200)	CA-16A-2N	RE 18318-92
	VUCN-20A	0431320058Z	5000 (350)	95 (360)	CA-20A-2N	RE 18318-93

Check poppet type with thermal relief

Symbol	Type	Code	Max. Pressure PSI (bar)	Max. Flow GPM (L/min)	Cavity	Data Sheet
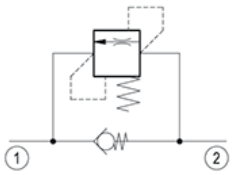	VUCN-10A-TR	043137X85Z	5000 (350)	21 (80)	CA-10A-2N	RE 18318-94

Part Number	Description	Max. Quantity	Shipment (Business Days)
R901007308	043120005600000 VUCN-08A-00	10	10 day(s)
R901106550	043120005605000 VUCN-08A-05	10	10 day(s)
R930006992	0431200056A0000 VUCN-08A-A0	10	10 day(s)
R901106596	043123008500000 VUCN-10A-00	10	10 day(s)
R930005884	043123008501000 VUCN-10A-01	10	10 day(s)
R901106601	043123008505000 VUCN-10A-05	10	10 day(s)
R901106602	04312300851500A VUCN-10A-15-A	10	10 day(s)
R901106616	043125002700000 VUCN-16A-00	10	10 day(s)
R930004414	0431250027A0000 VUCN-16A-A0	10	10 day(s)
R901106613	043128005700000 VUCN-12A-00	10	10 day(s)
R901106614	043128005705000 VUCN-12A-05	10	10 day(s)
R901109780	043132005800000 VUCN-20A-00	10	10 day(s)
R901109781	043132005803000 VUCN-20A-03	10	10 day(s)

GoTo Focused Delivery Program: Compact Hydraulics

Check Valves - Common Cavity - Reverse Check, poppet type

See Technical Data for more information.

For complete engineering and design information: ***GoTo www.boschrexroth-us.com/GoTocompact***

Features

- Common cavity
- Size CA-08A-2N
- Size CA-10A-2N
- Detailed information: RE18318-96, RE18318-97

Check, poppet reverse type

Symbol	Type	Code	Max. Pressure PSI (bar)	Max. Flow GPM (L/min)	Cavity	Data Sheet
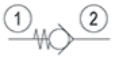	VURN-08A	0431210056Z	6000 (420)	7 (25)	CA-08A-2N	RE 18318-96
	VURN-10A	0431270085Z	5000 (350)	16 (60)	CA-10A-2N	RE 18318-97
	VURN-12A	0431360057	5000 (350)	24 (90)	CA-12A-2N	RE 18318-98

Part Number	Description	Max. Quantity	Shipment (Business Days)
R901106619	043121005602000 VURN-08A-02	10	10 day(s)

GoTo Focused Delivery Program: Compact Hydraulics

Check Valves - Common Cavity - Pilot-to-Open Check

See Technical Data for more information.

For complete engineering and design information: ***GoTo www.boschrexroth-us.com/GoTocompact***

Features

- Common cavity
- Size CA-08A-3N
- Size CA-10A-3N
- Detailed information: RE18319-34, RE18319-35

Pilot operated check, pilot to open

Symbol	Type	Code	Max. Pressure PSI (bar)	Max. Flow GPM (L/min)	Cavity	Data Sheet
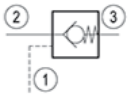	VSOA-08A	043310X56Z	5000 (350)	8 (30)	CA-08A-3N	RE 18319-34
	VSOA-10A	043310X85Z	5000 (350)	11 (40)	CA-10A-3N	RE 18319-35

Part Number	Description	Max. Quantity	Shipment (Business Days)
R930000836	043310005600000 VSOA-08A-00	10	10 day(s)
R901117416	043310008500000 VSOA-10A-00	10	10 day(s)
R901117420	043310008503000 VSOA-10A-03	10	10 day(s)
R930000847	043310105605000 VSOA-08A-05-OR	10	10 day(s)
R901117418	043310108500000 VSOA-10A-00-OR	10	10 day(s)

GoTo Focused Delivery Program: Compact Hydraulics

Check Valves - Common Cavity - Dual Pilot-to-Open Check

See Technical Data for more information.

For complete engineering and design information: ***GoTo www.boschrexroth-us.com/GoTocompact***

Features

- Common cavity
- Size CA-10A-4N
- Detailed information: RE18319-38

Dual pilot operated check, pilot to open

Symbol	Type	Code	Max. Pressure PSI (bar)	Max. Flow GPM (L/min)	Cavity	Data Sheet
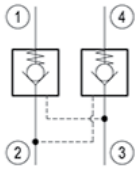	VSOD-10A	043603X85Z	5000 (350)	8 (30)	CA-10A-4N	RE 18319-38

continued on next page

Part Number	Description	Max. Quantity	Shipment (Business Days)
R930000016	043603008503000 VSOD-10A-03	10	10 day(s)

GoTo Focused Delivery Program: Compact Hydraulics

Check Valves - Common Cavity - Shuttle, direct acting poppet type

See Technical Data for more information.

For complete engineering and design information: ***GoTo www.boschrexroth-us.com/GoTocompact***

Features

- Common cavity
- Size CA-08A-3N
- Detailed information: RE18319-80

Directional poppet type, shuttle

Symbol	Type	Code	Max. Pressure PSI (bar)	Max. Flow GPM (L/min)	Cavity	Data Sheet
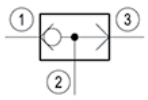	SELB-08A	49405005600	5000 (350)	up to 3 (10)	CA-08A-3N	RE 18319-80
	SELC-04A	0494070054	5000 (350)	1 (4)	Special CA-04A-3Y	RE 18319-82

Part Number	Description	Max. Quantity	Shipment (Business Days)
R901161981	049405005600000 SELB-08A	10	10 day(s)
R930005663	049407005400000 SELC-04A	10	10 day(s)

GoTo Focused Delivery Program: Compact Hydraulics

Check Valves - Sun Cavity - Pilot-to-Open Check

When pressure at 2 rises above the spring bias pressure, the poppet is pushed from its seat and flow is allowed from 2 to 1. The valve is normally closed (checked) from 1 to 2. When sufficient pilot pressure is present at port 3, the pilot piston acts to push the poppet from its seat and flow is allowed from 1 to 2. Precision machining and hardening processes allow virtually leak-free performance in the checked condition. Available with “manual override” option.

For complete engineering and design information: ***GoTo www.boschrexroth-us.com/GoTocompact***

Features

- Cavity: T-11A, T-2A, T-17A
- Detailed information: RE18319-39, RE18319-40, RE18319-41

Pilot operated, pilot-to-open check

Symbol	Type	Code	Max. Pressure PSI (bar)	Max. Flow GPM (L/min)	Cavity	Data Sheet
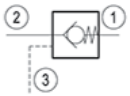	VSON-08U	043306X20Z	5000 (350)	16 (60)	T-11A	RE 18319-39
	VSON-12U	043307X86Z	5000 (350)	32 (120)	T-2A	RE 18319-40
	VSON-16U	043309X47Z	5000 (350)	63 (240)	T-17A	RE 18319-41

Part Number	Description	Max. Quantity	Shipment (Business Days)
R901106637	04330600200000A VSON-08U-00-A	10	10 day(s)
R901104068	043306102000000 VSON-08U-G-00	10	10 day(s)
R901099896	04330610560000A VSON-08A-G-00-A	10	10 day(s)
R901106638	04330700860000A VSON-12U-00-A	10	10 day(s)
R901106639	04330710860000A VSON-12U-G-00-A	10	10 day(s)

GoTo Focused Delivery Program: Compact Hydraulics

Logic Element Valves - Pressure compensator with load sense

Type:
VRLA-10A-D
VRLA-10A-S
VRLA-12A-D
VRLA-12A-S
VRLA-16A-D
VRLA-16A-S
VRLA-20A-D
VRLA-20A-S

For complete engineering and design information: ***GoTo www.boschrexroth-us.com/GoTocompact***

Features

- Data Sheet:
- RE 18321-90
- RE 18321-86
- RE 18321-83
- RE 18321-87
- RE 18321-84
- RE 18321-88
- RE 18321-85
- RE 18321-89

Pressure compensator with load sense

Symbol	Type	Code	Max. Pressure PSI (bar)	Max. Flow GPM (L/min)	Cavity	Data Sheet
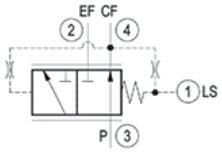 VRLA-....-D	VRLA-10A-D	048410X85Z	5000 (350)	12 (45)	CA-10A-2N	RE 18321-90
	VRLA-10A-S	0484090085Z	5000 (350)	12 (45)	CA-10A-2N	RE 18321-86
	VRLA-12A-D	048410X57Z	5000 (350)	26 (100)	CA-12A-2N	RE 18321-83
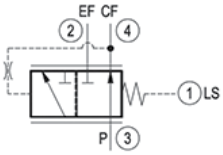 VRLA-....-S	VRLA-16A-S	0484090027Z	5000 (350)	42 (160)	CA-16A-2N	RE 18321-88
	VRLA-20A-D	048410X58Z	5000 (350)	60 (230)	CA-20A-2N	RE 18321-85

Part Number	Description	Max. Quantity	Shipment (Business Days)
R930001079	048409002711000 VRLA-16A-11-S	10	10 day(s)
R930001082	048409005812000 VRLA-20A-12-S	10	10 day(s)
R930001191	048409008505000 VRLA-10A-05-S	10	10 day(s)
R930001089	048410075710000 VRLA-12A-10-D-07	10	10 day(s)
R930001093	048410085812000 VRLA-20A-12-D-08	10	10 day(s)
R930001196	048410088510000 VRLA-10A-10-D-08	10	10 day(s)

GoTo Focused Delivery Program: Compact Hydraulics

Stacking Modules (EDCM/EDCMF-VM) - Anti-Cav Relief Module for EDC, B-side only

These modular secondary elements can be flange mounted on top of the EDC elements machined with the interfacing surface. They let through free flow to the A (or B) port until pressure increases and reaches the selected pressure setting; then they release flow into the tank channels.

For complete engineering and design information: ***GoTo www.boschrexroth-us.com/GoTocompact***

Features

- Body made from yellow zinc-plated cast iron
- Designed for quick response and stable pressure control
- Incorporate a reverse flow check for anti-cavitation
- Detailed Information: RA18301-45

Technical Data

General		
Weight	kg (lbs)	0.6 (1.3)
Ambient Temperature	°C (°F)	−20....+50 (−4....+120) [NBR seals]

Hydraulic		
Maximum pressure	bar (PSI)	310 (4500)
Maximum flow	l/min (GPM)	30 (7.93)
Hydraulic fluid General properties: it must have physical lubricating and chemical properties suitable for use in hydraulic systems such as, for example:		Mineral oil based hydraulic fluids HL (DIN 51524 part 1). Mineral oil based hydraulic fluids HLP (DIN 51524 part 2). For use of environmentally acceptable fluids (vegetable or polyglycol base) please consult us.
Fluid Temperature	°C (°F)	−20....+80 (−4....+176) [NBR seals]
Permissible degree of fluid contamination		ISO 4572: $\beta_x \geq 75$ X=12...15 ISO 4406: classe 20/18/15 NAS 1638: classe 9
Viscosity range	mm^2/s	5....420

Part Number	Description	Max. Quantity	Shipment (Business Days)
R930055672	L8565010A090030-EV.EDCMF-SAE8-VUM/A-0.5	10	10 day(s)
R933009078	L856501ABMM0030-EV.EDCMF-SAE8-VMA/AB-14	10	10 day(s)
R930055668	L856501ABMM00M0-EV.EDCM-VMA/AB-MOD-140B	10	10 day(s)
R933009079	L856501ABTT0030-EV.EDCMF-SAE8-VMA/AB-21	10	10 day(s)
R930055667	L856501ABTT00M0-EV.EDCM-VMA/AB-MOD-210B	10	10 day(s)
R933009080	L856501ABXX0030-EV.EDCMF-SAE8-VMA/AB-25	10	10 day(s)
R930055666	L856501ABXX00M0-EV.EDCM-VMA/AB-MOD-250B	10	10 day(s)

GoTo Focused Delivery Program: Compact Hydraulics

Stacking Modules (EDCM/EDCMF-VR) - PO Check Module for EDC, A-side only

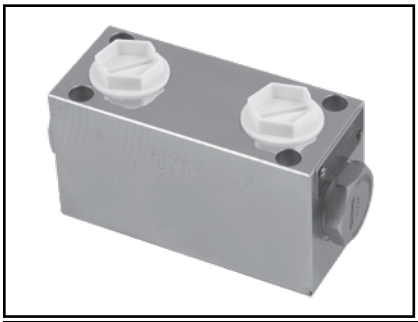

These secondary flangeable elements can be interfaced and bolted on top of the A and B ports of the ED elements of the directional valve assembly. They incorporate two cross piloted check valves which allow free flow toward the A and B outlet ports, and lock in a leak-free mode the flow returning from the actuator, until sufficient pilot pressure is built up in the opposite line and the check valve in opened.

For complete engineering and design information: ***GoTo www.boschrexroth-us.com/GoTocompact***

Features

- Body made from yellow zinc-plated cast iron
- Hydraulic Ports A2 and B2 are size G3/8 or G1/2 or 3/4-16 UNF 2-B (SAE8)
- Detailed Information: RA18301-46

Technical Data

General		
Weight	kg (lbs)	2.0 (4.4)
Ambient Temperature	°C (°F)	–20....+50 (–4....+120) [NBR seals]

Hydraulic		
Maximum pressure	bar (PSI)	310 (4500)
Maximum flow	l/min (GPM)	70 (18.5)
Hydraulic fluid General properties: it must have physical lubricating and chemical properties suitable for use in hydraulic systems such as, for example:		Mineral oil based hydraulic fluids HL (DIN 51524 part 1). Mineral oil based hydraulic fluids HLP (DIN 51524 part 2). For use of environmentally acceptable fluids (vegetable or polyglycol base) please consult us.
Fluid Temperature	°C (°F)	–20....+80 (–4....+176) [NBR seals]
Permissible degree of fluid contamination		ISO 4572: $\beta_x \geq 75$ X=12...15 ISO 4406: classe 20/18/15 NAS 1638: classe 9
Viscosity range	mm^2/s	5....420

Part Number	Description	Max. Quantity	Shipment (Business Days)
R930055656	L854100AB010030-EV.EDCMF-VR/AB-0.5BAR-S	10	10 day(s)

GoTo Focused Delivery Program: Compact Hydraulics

Stacking Modules (EDM-PO) - Stacking Modules

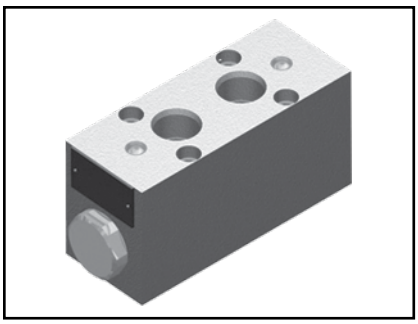

The secondary flangeable elements EDM-PO- can be interfaced and bolted on top of the A and B ports of the ED elements of the Directional Valve Assembly.
They incorporate two Cross Piloted Check Valves which allow free flow toward the A and B outlet ports, and lock in a leak free mode the flow returning from the actuator, until sufficient pilot pressure is built up in the opposite line and the check valve is opened.

For complete engineering and design information: ***GoTo GoTo www.boschrexroth-us.com/GoTocompact***

Features

- Hydraulic port sizes: A and B - SAE 8.
- Special coating and plating available, C.F.

Technical Data

General		
Ambient Temperature	°C (°F)	−20....+50 (−4....+120)
Material		Aluminum

Hydraulic		
Maximum pressure	bar (PSI)	210 (3000)
Maximum flow	l/min (GPM)	60 (15)
Hydraulic fluid General properties: it must have physical lubricating and chemical properties suitable for use in hydraulic systems such as, for example:		Mineral oil based hydraulic fluids HL (DIN 51524 part 1). Mineral oil based hydraulic fluids HLP (DIN 51524 part 2). For use of environmentally acceptable fluids (vegetable or polyglycol base) please consult us.
Fluid Temperature	°C (°F)	−20....+80 (−4....+176) [NBR]
Permissible degree of fluid contamination		ISO 4572: $\beta_x \geq 75$ X=12...15 ISO 4406: classe 20/18/15 NAS 1638: classe 9
Viscosity range	mm^2/s	5....420

*310 bar (4500 PSI) available. Consult factory.

Part Number	Description	Max. Quantity	Shipment (Business Days)
R987271885	L884A000A010030	10	10 day(s)
R987271887	L884A000B010030	10	10 day(s)
R987271883	L884A00AB010030	10	10 day(s)

GoTo Focused Delivery Program: Compact Hydraulics

Stacking Modules (EDM-CR) - Stacking Modules

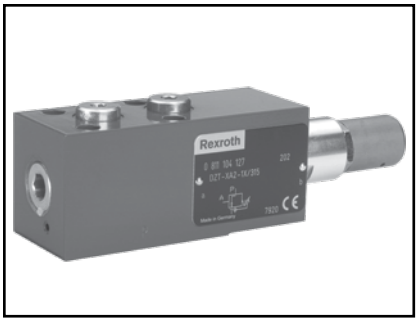

The secondary flangeable elements EDM-CR- can be interfaced and bolted on top of the A and B ports of the ED elements of the Directional Valve Assembly.
The body consists of one direct acting pressure relief valve. The relief valve for line A releases the oil into line B and vice versa.

For complete engineering and design information: ***GoTo GoTo www.boschrexroth-us.com/GoTocompact***

Features

- Port sizes: A and B - SAE 8
- Special coating and plating available, C.F.

Technical Data

General		
Ambient Temperature	°C (°F)	–20....+50 (–4....+120)
Material		Aluminum

Hydraulic				
		AB	**0A**	**0B**
Maximum pressure	bar (PSI)	210 (3000)	210 (3000)	210 (3000)
Maximum flow	l/min (GPM)	60 (15)	50 (13)	60 (15)
Hydraulic fluid General properties: it must have physical lubricating and chemical properties suitable for use in hydraulic systems such as, for example:		Mineral oil based hydraulic fluids HL (DIN 51524 part 1). Mineral oil based hydraulic fluids HLP (DIN 51524 part 2). For use of environmentally acceptable fluids (vegetable or polyglycol base) please consult us.		
Fluid Temperature	°C (°F)	–20....+80 (–4....+176) [NBR]		
Permissible degree of fluid contamination		ISO 4572: $\beta_x \geq 75$ X=12...15 ISO 4406: classe 20/18/15 NAS 1638: classe 9		
Viscosity range	mm^2/s	5....420		

*310 bar (4500 PSI) available. Consult factory.

Part Number	Description	Max. Quantity	Shipment (Business Days)
R987273979	L886A020AS20030	10	10 day(s)
R987273980	L886A020AS30030	10	10 day(s)
R987273981	L886A020BS10030	10	10 day(s)
R987273983	L886A020BS30030	10	10 day(s)
R987273975	L886A02ABS10030	10	10 day(s)
R987273976	L886A02ABS20030	10	10 day(s)

GoTo Focused Delivery Program: Compact Hydraulics

Stacking Modules (EDM-FC) - Stacking modules

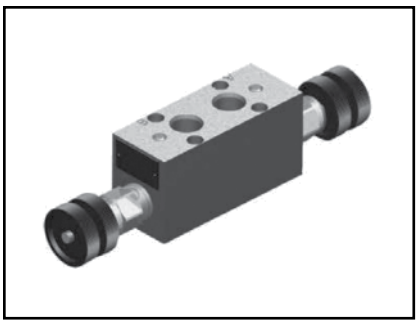

The secondary flangeable elements EDM-FC-_ can be interfaced and bolted on top of the A and B ports of the ED elements of the Directional Valve Assembly. They incorporate two unidirectional flow restrictors, and depending on the version selected, allow free flow A1>A2 and B1>B2, with controlled/restricted flow in the reverse directions A2>A1 and B2>B1, or vice-versa.

For complete engineering and design information: ***GoTo GoTo www.boschrexroth-us.com/GoTocompact***

Features

- Hydraulic port sizes: A and B - SAE B
- Special coating and plating available, C.F.
- Detailed information: RA18301-42

Technical Data

General		
Ambient Temperature	°C (°F)	−20....+50 (−4....+120)
Material		Aluminum

Hydraulic		
Maximum pressure	bar (PSI)	210 (3000)
Maximum flow	l/min (GPM)	60 (15)
Hydraulic fluid General properties: it must have physical lubricating and chemical properties suitable for use in hydraulic systems such as, for example:		Mineral oil based hydraulic fluids HL (DIN 51524 part 1). Mineral oil based hydraulic fluids HLP (DIN 51524 part 2). For use of environmentally acceptable fluids (vegetable or polyglycol base) please consult us.
Fluid Temperature	°C (°F)	−20....+80 (−4....+176) [NBR]
Permissible degree of fluid contamination		ISO 4572: $\beta_x \geq 75$ X=12...15 ISO 4406: classe 20/18/15 NAS 1638: classe 9
Viscosity range	mm^2/s	5....420

*310 bar (4500 PSI) available. Consult factory.

Part Number	Description	Max. Quantity	Shipment (Business Days)
R987273965	L885A010A2K0030	10	10 day(s)
R987273968	L885A010B2S0030	10	10 day(s)
R987273964	L885A01AB2S0030	10	10 day(s)
R987273972	L885A020A2S0030	10	10 day(s)
R987273974	L885A020B2S0030	10	10 day(s)
R987273970	L885A02AB2S0030	10	10 day(s)

GoTo Focused Delivery Program: Compact Hydraulics

Stacking Modules (EDM-CB) - Stacking modules

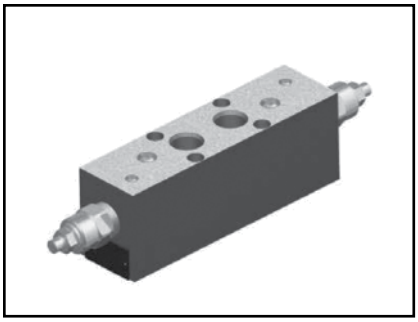

The secondary flangeable elements EDM-CB-_ can be interfaced and bolted on top of the A and B ports of the ED elements of the Directional Valve Assembly. They incorporate one or two cross piloted counterbalance valves which allow free flow toward the A and B outlet ports, and lock in a leak free mode the flow returning from the actuator. Pilot pressure in the opposite line reduces the pressure setting of the counterbalance valve in proportion to the pilot ratio until opening and allowing the flow return from the actuator.

For complete engineering and design information: ***GoTo GoTo www.boschrexroth-us.com/GoTocompact***

Features

- Hydraulic port sizes: A and B - SAE B
- Special coating and plating available, C.F.
- Detailed information: RA18301-43

Technical Data

General		
Ambient Temperature	°C (°F)	–20....+50 (–4....+120)
Material		Aluminum

Hydraulic		
Maximum pressure	bar (PSI)	210 (3000)
Maximum flow	l/min (GPM)	60 (15)
Hydraulic fluid General properties: it must have physical lubricating and chemical properties suitable for use in hydraulic systems such as, for example:		Mineral oil based hydraulic fluids HL (DIN 51524 part 1). Mineral oil based hydraulic fluids HLP (DIN 51524 part 2). For use of environmentally acceptable fluids (vegetable or polyglycol base) please consult us.
Fluid Temperature	°C (°F)	–20....+80 (–4....+176) [NBR]
Permissible degree of fluid contamination		ISO 4572: $\beta_x \geq 75$ X=12...15 ISO 4406: classe 20/18/15 NAS 1638: classe 9
Viscosity range	mm^2/s	5....420

*310 bar (4500 PSI) available. Consult factory.

Part Number	Description	Max. Quantity	Shipment (Business Days)
R987273961	L8835A20A20S330	10	10 day(s)
R987273962	L8835A20A35S330	10	10 day(s)
R987274184	L8835A20B35S330	10	10 day(s)
R987273959	L8835A2AB20S330	10	10 day(s)
R978055153	L8835A2AB35S830	10	10 day(s)

GoTo Focused Delivery Program: Compact Hydraulics

Stacking Modules (EDCM-VM5) - Secondary Pressure Relief for EDC, A & B-sides

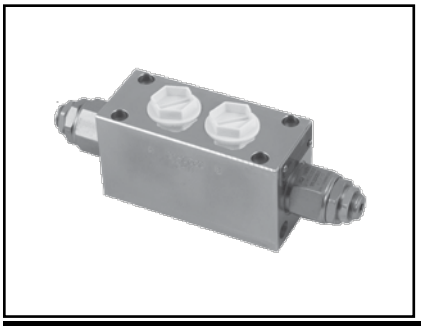

These modular secondary elements can be flange mounted on top of the EDC elements machined with the interfacing surface. They let through free flow to the A (or B) port until pressure increases and reaches the pressure setting; then they release flow into the Tank channels (T). The maximum secondary pressure in line A, or B, can be adjusted through the adjuster screw.

For complete engineering and design information: ***GoTo www.boschrexroth-us.com/GoTocompact***

Features

- Body is made of Yellow Zinc Plated (Cr+3) Cast Iron (CI)
- Hydraulic Ports A2 and B2 are size G3/8 and G1/2
- The modular version (M) enables flanging with other types of EDCM-modular-elements
- Detailed information: RA18301-47

Technical Data

General		
Weight	kg (lbs)	2.0 (4.4)
Ambient Temperature	°C (°F)	–20....+50 (–4....+120) [NBR seals]

Hydraulic		
Maximum pressure	bar (PSI)	310 (4500)
Maximum flow at P1	l/min (GPM)	50 (13.2)
Hydraulic fluid General properties: it must have physical lubricating and chemical properties suitable for use in hydraulic systems such as, for example:		Mineral oil based hydraulic fluids HL (DIN 51524 part 1). Mineral oil based hydraulic fluids HLP (DIN 51524 part 2). For use of environmentally acceptable fluids (vegetable or polyglycol base) please consult us.
Fluid Temperature	°C (°F)	–20....+80 (–4....+176) [NBR seals]
Permissible degree of fluid contamination		ISO 4572: $\beta_x \geq 75$ X=12...15 ISO 4406: classe 20/18/15 NAS 1638: classe 9
Viscosity range	mm^2/s	5....420

Part Number	Description	Max. Quantity	Shipment (Business Days)
R933008654	L856105ABSBB0M0-EV.EDCM-VM5/AB-SB-SB-MO	10	10 day(s)

GoTo Focused Delivery Program: Compact Hydraulics

Stacking Modules (EDCMF-...) - Flangeable elements with different ports for EDC

These modular secondary elements EDCMF_... can be flange mounted on top of the EDC elements machined with the interfacing surface.

For complete engineering and design information: ***GoTo www.boschrexroth-us.com/GoTocompact***

Features

- Body is made of Yellow Zinc Plated (Cr+3) Cast Iron (CI)
- They let through free flow to the A (or B) port
- Detailed information: RA18301-48

Technical Data

General		
Weight	kg (lbs)	0.6 (1.3)
Ambient Temperature	°C (°F)	–20....+50 (–4....+120) [NBR seals]

Hydraulic		
Maximum pressure	bar (PSI)	310 (4500)
Maximum flow	l/min (GPM)	60 (16)
Hydraulic fluid General properties: it must have physical lubricating and chemical properties suitable for use in hydraulic systems such as, for example:		Mineral oil based hydraulic fluids HL (DIN 51524 part 1). Mineral oil based hydraulic fluids HLP (DIN 51524 part 2). For use of environmentally acceptable fluids (vegetable or polyglycol base) please consult us.
Fluid Temperature	°C (°F)	–20....+80 (–4....+176) [NBR seals]
Permissible degree of fluid contamination		ISO 4572: $\beta_x \geq 75$ X=12...15 ISO 4406: classe 20/18/15 NAS 1638: classe 9
Viscosity range	mm^2/s	5....420

Part Number	Description		Max. Quantity	Shipment (Business Days)
R933009246	MODULAR BODY	CMB EDC S08 F S A/B	10	10 day(s)

GoTo Focused Delivery Program: Compact Hydraulics

Counterbalance Valves - Common Cavity

See Technical Data for more information.

For complete engineering and design information: ***GoTo www.boschrexroth-us.com/GoTocompact***

Features

- Cavity: CA-20A-3C
- Detailed information: RE18320-05

Standard poppet type, differential area

Symbol	Type	Code	Max. Pressure PSI (bar)	Max. Flow GPM (L/min)	Cavity	Data Sheet
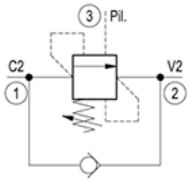	VBSN-20A	045225X58Z	5000 (350)	85 (320)	CA-20A-3C	RE 18320-05

Part Number	Description	Max. Quantity	Shipment (Business Days)
R901096053	045225035835000 VBSN-20A-4:1-35	10	10 day(s)
R901096057	045225105840000 VBSN-20A-8:1-40	10	10 day(s)

GoTo Focused Delivery Program: Compact Hydraulics

Counterbalance Valves - Sun Cavity - Standard Poppet Type, differential area, counterclockwise adj.

See Technical Data for more information.

For complete engineering and design information: ***GoTo www.boschrexroth-us.com/GoTocompact***

Features

- Cavity: T-11A, T-2A, T-17A, T-19A
- Detailed information: RE18320-17, RE18320-18, RE18320-19, RE18320-29

Standard poppet type, differential area, counterclockwise adjustment

Symbol	Type	Code	Max. Pressure PSI (bar)	Max. Flow GPM (L/min)	Cavity	Data Sheet
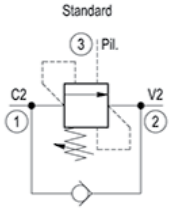	VBSN-08U-RS	045243X20Z	5000 (350)	16 (60)	T-11A	RE 18320-17
	VBSN-12U-RS	045244X86Z	5000 (350)	32 (120)	T-2A	RE 18320-18
	VBSN-16U-RS	045245X47Z	6000 (420)	63 (240)	T-17A	RE 18320-19
	VBSN-25U-RS	045246X50Z	5000 (350)	127 (480)	T-19A	RE 18320-29

Part Number	Description	Max. Quantity	Shipment (Business Days)
R930006109	045243032010000 VBSN-08U-RS-3:1-10-A	10	10 day(s)
R930006110	045243032020000 VBSN-08U-RS-3:1-20-A	10	10 day(s)
R930006111	045243032035000 VBSN-08U-RS-3:1-35-A	10	10 day(s)
R930006112	045243102020000 VBSN-08U-RS-8:1-20-A	10	10 day(s)
R930006113	045243102035000 VBSN-08U-RS-8:1-35-A	10	10 day(s)
R930055448	045243102035020 VBSN-08U-RS-8:1-35-02	10	10 day(s)
R930006114	045243312020000 VBSN-08U-RS-1.5:1-P-20-A	10	10 day(s)
R930006115	045243312035000 VBSN-08U-RS-1.5:1-P-35-A	10	10 day(s)
R930006116	045244038620000 VBSN-12U-RS-4:1-20	10	10 day(s)
R930006117	045244038635000 VBSN-12U-RS-4:1-35	10	10 day(s)
R930006118	045244108620000 VBSN-12U-RS-8:1-20	10	10 day(s)
R930006119	045244108635000 VBSN-12U-RS-8:1-35	10	10 day(s)
R930006121	045244428635000 VBSN-12U-RS-2:1-P-35	10	10 day(s)
R930000051	045245034720000 VBSN-16U-RS-4:1-20	10	10 day(s)
R930000052	045245034740000 VBSN-16U-RS-4:1-40	10	10 day(s)
R930000054	045245104740000 VBSN-16U-RS-8:1-40	10	10 day(s)

GoTo Focused Delivery Program: Compact Hydraulics

Counterbalance Valves - Sun Cavity - Standard Guided Poppet Type, differential area, counterclockwise adj.

See Technical Data for more information.

For complete engineering and design information: ***GoTo www.boschrexroth-us.com/GoTocompact***

Features

- Cavity: T-11A
- Detailed information: RE18320-16
-

Standard guided poppet type, differential area, counterclockwise adjustment

Symbol	Type	Code	Max. Pressure PSI (bar)	Max. Flow GPM (L/min)	Cavity	Data Sheet
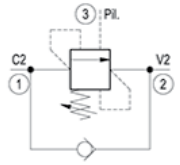	VBSN-08UU-RS	045242X20Z	4000 (280)	8 (30)	T-11A	RE 18320-16

Part Number	Description	Max. Quantity	Shipment (Business Days)
R930006107	045242102020000 VBSN-08UU-RS-4:1-20	10	10 day(s)
R930006108	045242372020000 VBSN-08UU-RS-9:1-20-A	10	10 day(s)

GoTo Focused Delivery Program: Compact Hydraulics

Counterbalance Valves - Sun Cavity - Relief Compensated Poppet Type, differential area, counterclockwise adj.

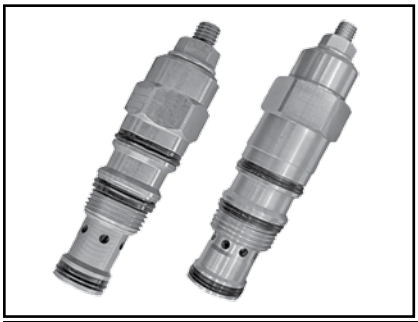

See Technical Data for more information.

For complete engineering and design information: ***GoTo www.boschrexroth-us.com/GoTocompact***

Features

- Cavity: T-11A, T-2A, T-17A
- Detailed information: RE18320-20, RE18320-21, RE18320-22

Relief compensated poppet type, differential area, counterclockwise adjustment

Symbol	Type	Code	Max. Pressure PSI (bar)	Max. Flow GPM (L/min)	Cavity	Data Sheet
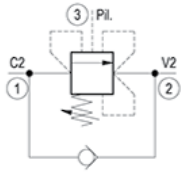	VBSP-08U	045415X20Z	5000 (350)	16 (60)	T-11A	RE 18320-20
	VBSP-12U	045416X86Z	5000 (350)	32 (120)	T-2A	RE 18320-21
	VBSP-16U	045417X47Z	6000 (420)	63 (240)	T-17A	RE 18320-22
	VBSP-25U	0454182550	6000 (420)	127 (480)	T-19A	RE 18320-30

Part Number	Description	Max. Quantity	Shipment (Business Days)
R930006122	045415032020000 VBSP-08U-RS-3:1-20-A	10	10 day(s)
R930006123	045415032035000 VBSP-08U-RS-3:1-35-A	10	10 day(s)
R930006125	045416038635000 VBSP-12U-RS-4:1-35	10	10 day(s)
R930000060	045417034740000 VBSP-16U-RS-4:1-40	10	10 day(s)

GoTo Focused Delivery Program: Compact Hydraulics

Counterbalance Valves - Sun Cavity - Vented Guided Poppet Type, counterclockwise adj.

See Technical Data for more information.

For complete engineering and design information: ***GoTo www.boschrexroth-us.com/GoTocompact***

Features

- Cavity: T-11A, T-2A, T-17A
- Detailed information: RE18320-23, RE18320-24, RE18320-25

Vented guided poppet type, counterclockwise adjustment

Symbol	Type	Code	Max. Pressure PSI (bar)	Max. Flow GPM (L/min)	Cavity	Data Sheet
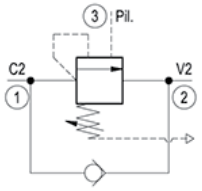	VBST-08U	045929X20Z	5000 (350)	16 (60)	T-11A	RE 18320-23
	VBST-012U	045930X86Z	5000 (350)	32 (120)	T-2A	RE 18320-24
	VBST-16U	045931X47Z	5000 (350)	63 (240)	T-17A	RE 18320-25

Part Number	Description	Max. Quantity	Shipment (Business Days)
R930006129	045929032015000 VBST-08U-RS-3:1-15	10	10 day(s)
R930006130	045929032020000 VBST-08U-RS-3:1-20	10	10 day(s)
R930006131	045930038620000 VBST-12U-RS-4:1-20	10	10 day(s)
R930006132	045930038635000 VBST-12U-RS-4:1-35	10	10 day(s)
R930000061	045931034720000 VBST-16U-RS-3:1-20	10	10 day(s)
R930000063	045931034740000 VBST-16U-RS-3:1-40	10	10 day(s)

GoTo Focused Delivery Program: Compact Hydraulics

Counterbalance Valves - Sun Cavity - 4-Port Vented Poppet Type, external drain, counterclockwise adj.

See Technical Data for more information.

For complete engineering and design information: ***GoTo www.boschrexroth-us.com/GoTocompact***

Features

- Cavity: T-21A, T-22A, T-23A
- Detailed information: RE18320-26, RE18320-27, RE18320-28

4-ported vented poppet type, with external drain, counterclockwise adjustment

Symbol	Type	Code	Max. Pressure PSI (bar)	Max. Flow GPM (L/min)	Cavity	Data Sheet
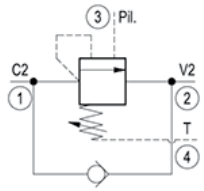	VBSY-08U	045932X20Z	5000 (350)	16 (60)	T-21A	RE 18320-26
	VBSY-012U	045933X86Z	5000 (350)	32 (120)	T-22A	RE 18320-27
	VBSY-16U	045934X47Z	5000 (350)	63 (240)	T-23A	RE 18320-28

Part Number	Description	Max. Quantity	Shipment (Business Days)
R930006134	045932032020000 VBSY-08U-RS-3:1-20	10	10 day(s)

GoTo Focused Delivery Program: Compact Hydraulics

Counterbalance Valves - Integrated Cavity

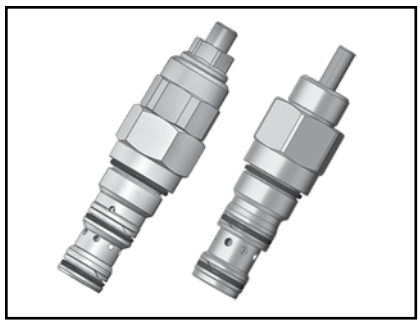

See Technical Data for more information.

For complete engineering and design information: ***GoTo www.boschrexroth-us.com/GoTocompact***

Features

- Cavity: A6610, A12336
- Detailed formation: RE330-34, RE330-35

Vented Guided Poppet Type, counterclockwise adj.

Symbol	Type	Code	Max. Pressure PSI (bar)	Max. Flow GPM (L/min)	Cavity	Data Sheet
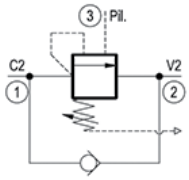	VBST-12HH	0459130315	6000 (420)	27 (100)	A12336	RA 00162-03

Part Number	Description	Max. Quantity	Shipment (Business Days)
R901113658	045913031540000 VBST-12HH-4:1-40	10	10 day(s)

GoTo Focused Delivery Program: Compact Hydraulics

Flow Control Valves - 3-Way Pressure Compensated, fully adjustable

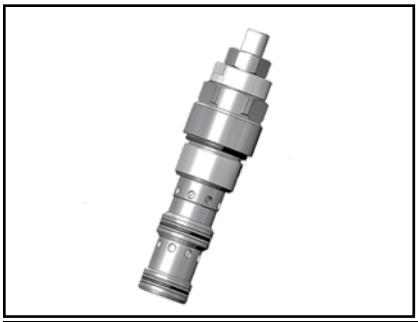

See Technical Data for more information.

For complete engineering and design information: ***GoTo www.boschrexroth-us.com/GoTocompact***

Features

- Cavity: CA-12A-3N
- Detailed information: RE18321-21

3-way pressure compensated, fully adjustable

Symbol	Type	Code	Max. Pressure PSI (bar)	Max. Flow GPM (L/min)	Cavity	Data Sheet
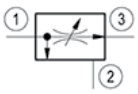	VRFD-10A	0404020485	5000 (350)	16 (60)	CA-10A-2N	RE 18321-20
	VRFD-12A	040404X57Z	up to 5000 (350)	32 (120)	CA-12A-3N	RE 18321-21

Part Number	Description	Max. Quantity	Shipment (Business Days)
R930055362	04040204854000A VRFD-10A-V-40	10	10 day(s)
R930006093	040404045750000 VRFD-12A-V-50	10	10 day(s)

GoTo Focused Delivery Program: Compact Hydraulics

Flow Control Valves - Cartridge Restrictors

See Technical Data for more information.

For complete engineering and design information: ***GoTo www.boschrexroth-us.com/GoTocompact***

Features

- Cavity: CA-08A-2N, CA-10A-2N, CA-12A-2N, CA-16A-2N
- Detailed information: RE18321-26, RE18321-27, RE18321-28, RE18321-29

Cartridge restrictors

Symbol	Type	Code	Max. Pressure PSI (bar)	Max. Flow GPM (L/min)	Cavity	Data Sheet
	ST-C-06	OD2101X56	5000 (350)	11 (40)	CA-08A-2N	RE 18321-26
	ST-C-10	OD2101X36	5000 (350)	19 (70)	CA-10A-2N	RE 18321-27
	ST-C-12	OD2101X89	5000 (350)	39 (150)	CA-12A-2N	RE 18321-28
	ST-C-16	OD2101X75	5000 (350)	39 (150)	CA-16A-2N	RE 18321-29

Part Number	Description	Max. Quantity	Shipment (Business Days)
R934001238	OD21010305 VSTXX12-21X03	10	10 day(s)
R901109366	OD21010356 VSTXX06CA.18X03	10	10 day(s)
R901109837	OD210103750000 VSTXX12-75X03	10	10 day(s)
R901109832	OD210103890000 VSTXX12-89X03	10	10 day(s)
R901109831	OD210104360000 VSTXX09-36X04	10	10 day(s)
R901109367	OD21010456 VSTXX06-18X04	10	10 day(s)
R901109838	OD210104750000 VSTXX12-75X04	10	10 day(s)
R901109834	OD210104890000 VSTXX12-89X04	10	10 day(s)

GoTo Focused Delivery Program: Compact Hydraulics

Flow Control Valves - Needle Restrictors, free reverse flow

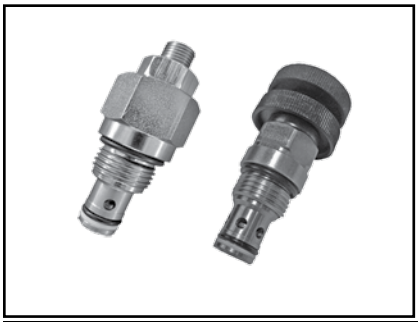

See Technical Data for more information.

For complete engineering and design information: ***GoTo www.boschrexroth-us.com/GoTocompact***

Features

- Cavity: CA-08A-2N, CA-10A-2N
- Detailed information: RE18321-10, RE18321-11

Needle restrictors

Symbol	Type	Code	Max. Pressure PSI (bar)	Max. Flow GPM (L/min)	Cavity	Data Sheet
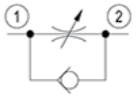	STVU-08A	040103X5600	5000 (350)	11 (40)	CA-08A-2N	RE 18321-10
	STVU-10A	040105X8500	5000 (350)	22 (80)	CA-10A-2N	RE 18321-11
	STFU-08A	040106X5600	5000 (350)	11 (40)	CA-08A-2N	RE 18321-09

Part Number	Description	Max. Quantity	Shipment (Business Days)
R930000002	040103035600000 STVU-08A	10	10 day(s)
R930000003	040103045600000 STVU-08A-V	10	10 day(s)
R930005606	040105038500000, STVU-10A	10	10 day(s)

GoTo Focused Delivery Program: Compact Hydraulics

Flow Control Valves - Needle Restrictors, fine adjustment

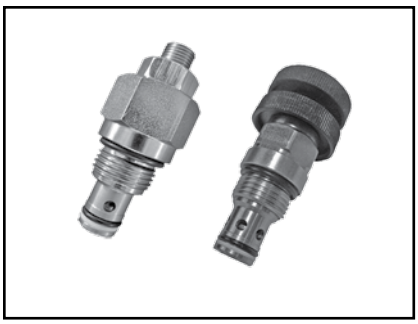

See Technical Data for more information.

For complete engineering and design information: ***GoTo www.boschrexroth-us.com/GoTocompact***

Features

- Cavity: CA-08A-2N
- Detailed information: RE18321-09

Needle restrictors

Symbol	Type	Code	Max. Pressure PSI (bar)	Max. Flow GPM (L/min)	Cavity	Data Sheet
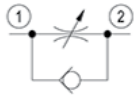	STVU-08A	040103X5600	5000 (350)	11 (40)	CA-08A-2N	RE 18321-10
	STVU-10A	040105X8500	5000 (350)	22 (80)	CA-10A-2N	RE 18321-11
	STFU-08A	040106X5600	5000 (350)	11 (40)	CA-08A-2N	RE 18321-09

Part Number	Description	Max. Quantity	Shipment (Business Days)
R930001067	040106035600000 STFU	10	10 day(s)

GoTo Focused Delivery Program: Compact Hydraulics

Flow Control Valves - 2-Way Pressure Compensated, fixed setting

See Technical Data for more information.

For complete engineering and design information: ***GoTo www.boschrexroth-us.com/GoTocompact***

Features

- Cavity: CA-08A-2N, CA-10A-2N
- Detailed information: RE18321-12, RE18321-13

2-way pressure compensated, fixed setting

Symbol	Type	Code	Max. Pressure PSI (bar)	Max. Flow GPM (L/min)	Cavity	Data Sheet
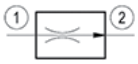	VRFA-08A	0402010056Z	up to 3000 (210)	2 (8)	CA-08A-2N	RE 18321-12

continued on next page

Part Number	Description	Max. Quantity	Shipment (Business Days)
R901109350	040201005609000 VRFA-08A-F-09	10	10 day(s)
R901109362	04020100568000A VRFA-08A-F-80-A	10	10 day(s)
R930005626	040203005763000 VRFA-12A-TF-63	10	10 day(s)

GoTo Focused Delivery Program: Compact Hydraulics

Flow Control Valves - Flow dividers and combiners

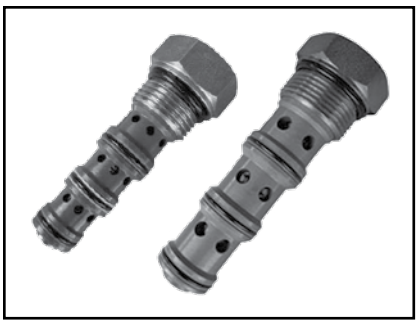

Type: DRFN-10A, DRFN-16A

For complete engineering and design information: ***GoTo www.boschrexroth-us.com/GoTocompact***

Features

- Data Sheet: RE 18321-24, RE 18321-25

Flow dividers and combiners

Symbol	Type	Code	Max. Pressure PSI (bar)	Max. Flow GPM (L/min)	Cavity	Data Sheet
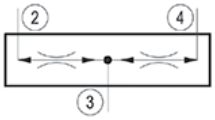	DRFN-10A	0405010085	5000 (350)	14 (54)	CA-10A-2N	RE 18321-24
	DRFN-16A	0405020027	5000 (350)	44 (165)	CA-16A-2N	RE 18321-25

Part Number	Description	Max. Quantity	Shipment (Business Days)
R901096083	040501008516000 DRFN-10A-16	10	10 day(s)
R901096086	040501008530000 DRFN-10A-30	10	10 day(s)
R930053927	04050200270600A DRFN-16A-06	10	10 day(s)
R930053929	04050200271300A DRFN-16A-13	10	10 day(s)
R930053931	04050200271600A DRFN-16A-16	10	10 day(s)

GoTo Focused Delivery Program: Compact Hydraulics

Flow Control Valves - 3-Way Pressure Compensated, fixed setting

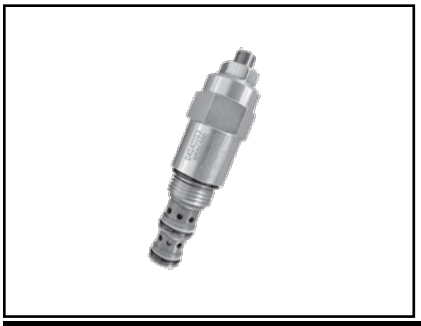

Type:
VRFC-10A-TF
VRFC-12A-TF

For complete engineering and design information: ***GoTo www.boschrexroth-us.com/GoTocompact***

Features

- Data Sheet: 18321-18, 18321-19

3-way pressure compensated, fixed setting

Symbol	Type	Code	Max. Pressure PSI (bar)	Max. Flow GPM (L/min)	Cavity	Data Sheet
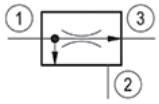	VRFC-12A-TF	0404030057	5000 (350)	17 (63)	CA-12A-2N	RE 18321-19

continued on next page

Part Number	Description	Max. Quantity	Shipment (Business Days)
R930000072	040403005723000 VRFC-12A-TF-23	10	10 day(s)

GoTo Focused Delivery Program: Compact Hydraulics

Solenoid On/Off Cartridges - 2-Way, pilot operated poppet type, normally closed

See Technical Data for more information.

For complete engineering and design information: ***GoTo www.boschrexroth-us.com/GoTocompact***

Features

- Cavity: CA-08A-2N, CA-10A-2N, CA-16A-2N
- Detailed information: RE18323-02, RE18323-11, RE18323-17

2-way pilot operated poppet type, normally closed

Symbol	Type	Code	Max. Pressure PSI (bar)	Max. Flow GPM (L/min)	Cavity	Data Sheet
▼ Version 05 ▼ Version 03 ▼ Version 31 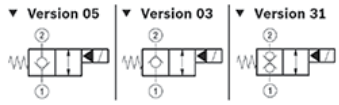	VEI-8A-12-NC	OD15X75YS0	5000 (350)	up to 40 (150)	CA-16A-2N	RE 18323-17
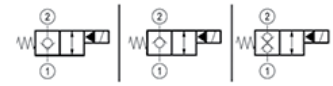	VEI-7A-16-NC	OD150375Y00	5000 (350)	up to 53 (200)	CA-16A-2N	RA 00162-03

Part Number	Description	Max. Quantity	Shipment (Business Days)
R934004878	OD1503363DS000 VEI8A2B09.36K03.3DNCC222	10	10 day(s)
R901094748	OD1531753DS000 VEI8A2T12.75K31.3DNCC225	10	10 day(s)
R901109986	OD153175750000 VEI7A2T14.75K31.75NCL630	10	10 day(s)

GoTo Focused Delivery Program: Compact Hydraulics

Solenoid On/Off Cartridges - 2-Way, pilot operated poppet type, normally open

See Technical Data for more information.

For complete engineering and design information: ***GoTo www.boschrexroth-us.com/GoTocompact***

Features

- Cavity: CA-08A-2N, CA-10A-2N, CA-16A-2N
- Detailed information: RE18323-06, RE18323-12, RE18323-18

2-way pilot operated poppet type, normally open

Symbol	Type	Code	Max. Pressure PSI (bar)	Max. Flow GPM (L/min)	Cavity	Data Sheet
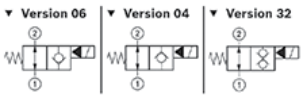	VEI-8A-10-NA	OD15X36YS0	5000 (350)	up to 18 (70)	CA-10A-2N	RE 18323-12
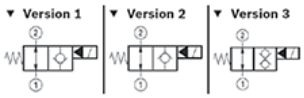	VEI-8A-16A-NA	OD15X75YS0	5000 (350)	up to 40 (150)	CA-16A-2N	RE 18323-18
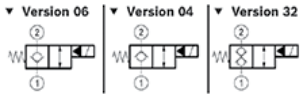	VEI-7A-16-NA	OD15XY7554	5000 (350)	up to 53 (200)	CA-16A-2N	RA 00162-03

Part Number	Description	Max. Quantity	Shipment (Business Days)
R901091125	OD1504361BS000 VEI8A2B09.36K04.1BNAC225	10	10 day(s)
R901094731	OD1504751AS000 VEI8A2B12.75K04.1ANAC225	10	10 day(s)
R901095955	OD1506751BS000 VEI8A2A12.75K06.1BNAC225	10	10 day(s)
R901094754	OD1532751BS000 VEI8A2T12.75K32.1BNAC225	10	10 day(s)
R901094755	OD1532751CS000 VEI8A2T12.75K32.1CNAC225	10	10 day(s)
R901109991	OD153275540000 VEI7A2T14.75K32.54NAL630	10	10 day(s)

GoTo Focused Delivery Program: Compact Hydraulics

Solenoid Directional Cartridges - 3/2 Solenoid Operated Valves, spool type

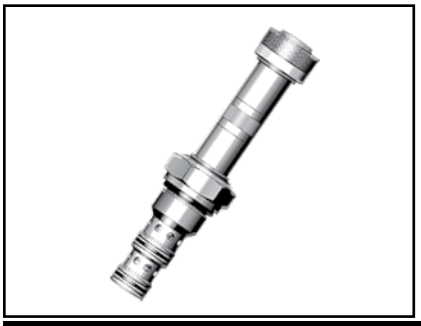

See Technical Data for more information.

For complete engineering and design information: ***GoTo www.boschrexroth-us.com/GoTocompact***

Features

- Cavity: CA-08A-3N, CA-10A-3N
- Detailed information: RE00162-02

3-way, 2-position spool type, normally closed

Symbol	Type	Code	Max. Pressure PSI (bar)	Max. Flow GPM (L/min)	Cavity	Data Sheet
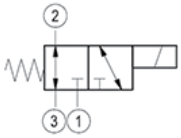	VED-7I-32-09	OD131077Y00	3000 (210)	6 (20)	CA-10A-3N	RE 00162-02

Part Number	Description	Max. Quantity	Shipment (Business Days)
R901113686	OD1310777000000 (Alt code OD1310771A0000)	10	10 day(s)
R901125116	OD131177700000 VED7I3209.77K11.70NCL625	10	10 day(s)
R901126890	OD131177710000 VED7I3209.77K11.71NCL625	10	10 day(s)
R901113690	OD132077700000 VED7I3209.77K20.70NCL625	10	10 day(s)
R901113692	OD132077710000 VED7I3209.77K20.71NCL625	10	10 day(s)
R901115704	OD133077700000 VED7I3209.77K30.70NCL625	10	10 day(s)
R901126898	OD133077710000 VED7I3209.77K30.71NCL625	10	10 day(s)

GoTo Focused Delivery Program: Compact Hydraulics

Solenoid Directional Cartridges - 4/3 Solenoid Operated Valves, spool type

See Technical Data for more information.

For complete engineering and design information: ***GoTo www.boschrexroth-us.com/GoTocompact***

Features

- Cavity: CA-10A-4N
- Detailed information: RE00162-02

4-way, 3-position spool type, normally closed

Symbol	Type	Code	Max. Pressure PSI (bar)	Max. Flow GPM (L/min)	Cavity	Data Sheet
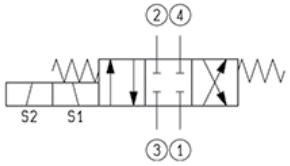	VED-7I-43-09	OD143W78Y00	3000 (210)	6 (20)	CA-10A-4N	RE 00162-02
	VED-8I-43-06	OD143W58Y00	3000 (210)	3 (10)	CA-08A-4N	RE 00162-02

Part Number	Description	Max. Quantity	Shipment (Business Days)
R901113701	OD1431788000000 (Alt code OD1410782A0000)	10	10 day(s)
R901113703	OD143178810000 VED7I4309.78K31.81NCD620	10	10 day(s)
R901113706	OD1432788000000 (Alt code OD1420782A0000)	10	10 day(s)

GoTo Focused Delivery Program: Compact Hydraulics

Solenoid Directional Cartridges - 4/2 Solenoid Operated Valves, spool type

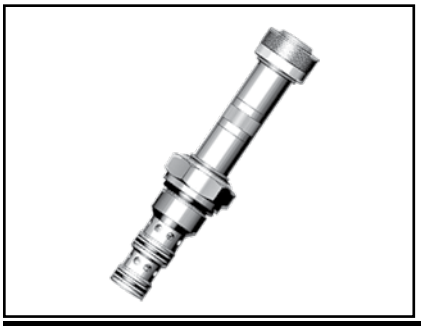

Type:
VED-7I-42-09
VED-8I-42-06
VED-10A-42

For complete engineering and design information: ***GoTo www.boschrexroth-us.com/GoTocompact***

Features

- Data Sheet: RE 00162-02 (1.31.070.U), RE 00162-02 (1.31.050.U), RE18324-59

4-way, 2-position spool type, normally closed

Symbol	Type	Code	Max. Pressure PSI (bar)	Max. Flow GPM (L/min)	Cavity	Data Sheet
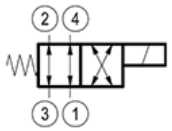	VED-7I-42-09	OD144078Y00	3000 (210)	6 (20)	CA-10A-4N	RE 00162-02 (1.31.070.U)

Part Number	Description	Max. Quantity	Shipment (Business Days)
R901113699	OD144078710000 VED7I4209.78K40.71NCL625	10	10 day(s)
R901126906	OD144178700000 VED7I4209.78K41.70NCL625	10	10 day(s)

GoTo Focused Delivery Program: Compact Hydraulics

Solenoid Directional Cartridges - Proportional pressure relief, pilot operated

Valves of type KBVS are pilot-operated proportional pressure relief valves in spool design and are used to limit the pressure in hydraulic systems. They mainly consist of the screwed in proportional pilot control valve and the main valve. Dependent on the electric command value, these valves can be used to steplessly set the system pressure to be limited. At command value 0 or in the event of a power failure, the maximum pressure is set (fail-safe behavior).

For complete engineering and design information: ***GoTo www.boschrexroth-us.com/GoTocompact***

Features

- Mounting cavity R/UNF10-01-0-06
- Pilot-operated proportional valve for system pressure limitation
- Suitable for mobile and industrial applications
- Actuation by proportional solenoid with central thread and detachable coil
- Solenoid coil can be rotated via an adjustment screw, the valve is set to maximum pressure
- Data Sheet: RE18160

High-pressure relief, pilot operated

Symbol	Type	Code	Max. Pressure PSI (bar)	Max. Flow GPM (L/min)	Cavity	Data Sheet
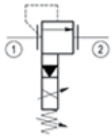	KBVS	n/a	5000 (350)	53 (200)	R/UNF-10-01-0-06	RE18160

Part Number	Description	Max. Quantity	Shipment (Business Days)
R901325105	KBVSL1BA/FV	10	10 day(s)
R901325111	KBVSR1BA/FV	10	10 day(s)

GoTo Focused Delivery Program: Compact Hydraulics

Solenoid Directional Cartridges - Proportional non-compensated flow regulator

Type:
VEP-5A-2Q-09
VEP-5A-2Q-09-NA
VEP-5A-2Q-14

For complete engineering and design information: ***GoTo www.boschrexroth-us.com/GoTocompact***

Features

- Data Sheet: RE 18323-63, RE 18323-64, RE 18323-62

Non-compensated flow regulator

Symbol	Type	Code	Max. Pressure PSI (bar)	Max. Flow GPM (L/min)	Cavity	Data Sheet
	VEP-5A-2Q-09	OD92X77YZ	3000 (210)	11 (40)	CA-10A-3N	RE 18323-63
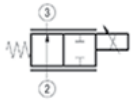	VEP-5A-2Q-09-NA	OD920277YZ	3000 (210)	11 (40)	CA-10A-3N	RE 18323-64
	VEP-5A-2Q-14	OD92X12Y00	3000 (210)	16 (60)	CA-12A-3N	RE 18323-62

Part Number	Description	Max. Quantity	Shipment (Business Days)
R934001510	OD920277030100 VEP5A2Q09.77K02.03NAP925	10	10 day(s)
R934003129	OD920277030300 VEP5A2Q09.77K02.03NAP925	10	10 day(s)
R934001514	OD920312030000 VEP5A2Q14.12K03.03NCP930	10	10 day(s)
R934001515	OD920312040000 VEP5A2Q14.12K03.04NCP930	10	10 day(s)
R934001520	OD920377030300 VEP5A2Q09.77K03.03NCP925	10	10 day(s)

GoTo Focused Delivery Program: Compact Hydraulics

Solenoid Directional Cartridges - Proportional non-compensated flow regulator, poppet type

Type:
VEPN-12A-16

For complete engineering and design information: ***GoTo www.boschrexroth-us.com/GoTocompact***

Features

- Data Sheet: RE 18323-69

Non-compensated flow regulator, poppet type

Symbol	Type	Code	Max. Pressure PSI (bar)	Max. Flow GPM (L/min)	Cavity	Data Sheet
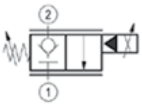	VEPN-12A-16	OD9506897200	3000 (210)	16 (60)	CA-12A-2N	RE 18323-69

Part Number	Description	Max. Quantity	Shipment (Business Days)
R934001162	OD950689720000 VEPN-12A-16/25-070-Q6-N7	10	10 day(s)

GoTo Focused Delivery Program: Compact Hydraulics

Solenoid Directional Cartridges - Proportional pressure reducing, pilot operated

Type:
VEP-5A-2R-10

For complete engineering and design information: ***GoTo www.boschrexroth-us.com/GoTocompact***

Features

- Data Sheet: RE 18323-61

Pressure reducing, pilot operated

Symbol	Type	Code	Max. Pressure PSI (bar)	Max. Flow GPM (L/min)	Cavity	Data Sheet
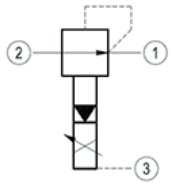	VEP-5A-2R-10	OD910677Y00	3000 (210)	16 (60)	CA-10A-3N	RE 18323-61

Part Number	Description	Max. Quantity	Shipment (Business Days)
R901126868	OD910677040000 VEP5A2R10.77K06.04NAP925	10	10 day(s)

GoTo Focused Delivery Program: Compact Hydraulics

Solenoid Directional Cartridges - Proportional pressure reducing, direct acting

Type:
VEP-5A-3R

For complete engineering and design information: ***GoTo www.boschrexroth-us.com/GoTocompact***

Features

- Data Sheet: RE 18323-60

Pressure reducing, direct acting

Symbol	Type	Code	Max. Pressure PSI (bar)	Max. Flow GPM (L/min)	Cavity	Data Sheet
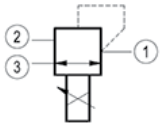	VEP-5A-3R	OD910177Y00	3000 (210)	3 (10)	CA-10A-3N	RE 18323-60

Part Number	Description	Max. Quantity	Shipment (Business Days)
R934001495	OD910177030000 VEP5A3R06.77K01.03NAP630	10	10 day(s)

GoTo Focused Delivery Program: Compact Hydraulics

Solenoid Directional Cartridges - Proportional relief, direct acting

Type:
VEP-5B-2S-D

For complete engineering and design information: ***GoTo www.boschrexroth-us.com/GoTocompact***

Features

- Data Sheet: RE 18323-65

Relief, direct acting

Symbol	Type	Code	Max. Pressure PSI (bar)	Max. Flow GPM (L/min)	Cavity	Data Sheet
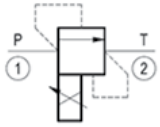	VEP-5B-2S-D	OD940118YZ	5000 (350)	1.3 (5)	CA-08A-2N	RE 18323-65

Part Number	Description	Max. Quantity	Shipment (Business Days)
R934001531	OD940118032000 VEP5B2S20.18K01.03NAP925	10	10 day(s)
R934001532	OD940118033500 VEP5B1S35.18K01.03NAP925	10	10 day(s)
R934001533	OD940118041000 VEP5B2S10.18K01.04NAP925	10	10 day(s)
R934001535	OD940118043500 VEP5B1S35.18K01.04NAP925	10	10 day(s)

GoTo Focused Delivery Program: Compact Hydraulics

Solenoid Directional Cartridges - Proportional relief, pilot operated

Type:
VEP-5B-2S-P

For complete engineering and design information: ***GoTo www.boschrexroth-us.com/GoTocompact***

Features

- Data Sheet: RE 18323-67

Relief, pilot operated

Symbol	Type	Code	Max. Pressure PSI (bar)	Max. Flow GPM (L/min)	Cavity	Data Sheet
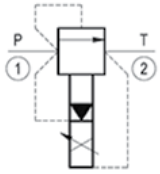	VEP-5B-2S-P	OD940561YZ	5000 (350)	40 (150)	Special, 065	RE 18323-67

Part Number	Description	Max. Quantity	Shipment (Business Days)
R934001536	OD940536031000 VEP5B2S10.36K05.03NAP925	10	10 day(s)
R934001537	OD940536032000 VEP5B2S20.36K05.03NAP925	10	10 day(s)
R934001538	OD940536033500 VEP5B2S35.36K05.03NAP925	0	0 day(s)
R934003877	OD940536043500 VEP5B2S35.36K05.04NAP925	10	10 day(s)

GoTo Focused Delivery Program: Compact Hydraulics

Solenoid Directional Cartridges - Proportional flow control, with integrated pressure compensator

Type:
KUDSR

For complete engineering and design information: ***GoTo www.boschrexroth-us.com/GoTocompact***

Features

- Data Sheet: RE 18702

Flow control with integrated pressure compensator

Symbol	Type	Code	Max. Pressure PSI (bar)	Max. Flow GPM (L/min)	Cavity	Data Sheet
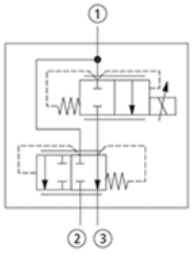	KUDSR	n/a	5000 (350)	32 (120)	R/UNF16-03-0-06	RE18702

Part Number	Description	Max. Quantity	Shipment (Business Days)
R901287409	KUDSR3C1A/FN9V	10	10 day(s)
R901255657	KUDSR3CA/FN9V	10	10 day(s)

GoTo Focused Delivery Program: Compact Hydraulics

Line Bodies - Common Cavity

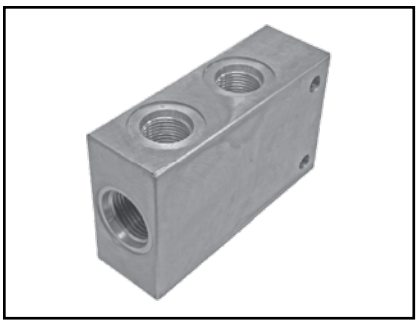

See Technical Data for more information.

For complete engineering and design information: ***GoTo www.boschrexroth-us.com/GoTocompact***

Features

- Detailed information: RE18325-86

Common Cavity

Material	Ports (SAE)	Cavity	Max. Pressure PSI (bar)	Part Number	Description	Data Sheet
Aluminum	6	8-2N	3000 (210)	R978032340	CB08-2N-A/S06	RE 18325-86
Aluminum	6	8-3N	3000 (210)	R978032341	CB08-3N-A/S06	
Aluminum	8	10-2N	3000 (210)	R978032348	CB10-2N-A/S08	
Aluminum	8	10-3N	3000 (210)	R978032349	CB10-3N-A/S08	
Aluminum	8	10-4N	3000 (210)	R978032351	CB10-4N-A/S08	
Aluminum	12	16-2N	3000 (210)	R978032360	CB16-2N-A/S12	
Ductile Iron	6	8-2N	5000 (350)	R978032344	CB08-2N-D/S06	
Ductile Iron	6	8-3N	5000 (350)	R978032345	CB08-3N-D/S06	
Ductile Iron	8	10-2N	5000 (350)	R978032352	CB10-2N-D/S08	
Ductile Iron	8	10-3N	5000 (350)	R978032353	CB10-3N-D/S08	
Ductile Iron	8	10-4N	5000 (350)	R978032355	CB10-4N-D/S08	
Ductile Iron	12	16-2N	5000 (350)	R978032362	CB16-2N-D/S12	

Part Number	Description	Max. Quantity	Shipment (Business Days)
R978032340	CB08-2N-A/S06	10	10 day(s)
R978032344	CB08-2N-D/S06	10	10 day(s)
R978032341	CB08-3N-A/S06	10	10 day(s)
R978032345	CB08-3N-D/S06	10	10 day(s)
R978032348	CB10-2N-A/S08	10	10 day(s)
R978032352	CB10-2N-D/S08	10	10 day(s)
R978032349	CB10-3N-A/S08	10	10 day(s)
R978032353	CB10-3N-D/S08	10	10 day(s)
R978032351	CB10-4N-A/S08	10	10 day(s)
R978032355	CB10-4N-D/S08	10	10 day(s)
R978032360	CB16-2N-A/S12	10	10 day(s)
R978032362	CB16-2N-D/S12	10	10 day(s)

GoTo Focused Delivery Program: Compact Hydraulics

Line Bodies - Sun Cavity

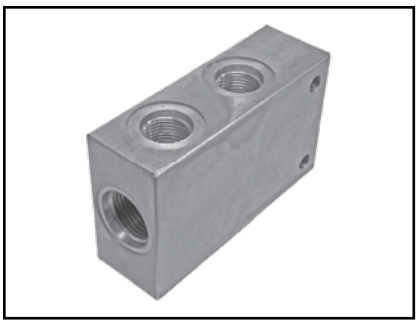

See Technical Data for more information.

For complete engineering and design information: ***GoTo www.boschrexroth-us.com/GoTocompact***

Features

- Detailed information: RE18325-86

Sun Cavity

Material	Ports	Cavity	Max. Pressure PSI (bar)	Part Number	Description	Data Sheet
Aluminum	10	T-2A	3000 (210)	R978041744	CBT-2A-A/S10	RE 18325-86
Aluminum	8	T-11A	3000 (210)	R978012829	CBT-11A-A/S08	
Aluminum	8	T-11A	3000 (210)	R978041747	CBDT-11A-A/S08	
Ductile Iron	10	T-2A	5000 (350)	R978041745	CBT-2A-D/S10	
Ductile Iron	8	T-11A	5000 (350)	R978041748	CBDT-11A-D/S08	
Ductile Iron	8	T-11A	5000 (350)	R978012838	CBT-11A-D/S08	

Note: Ductile iron bodies include RoHS compliant yellow zinc plating.

Part Number	Description	Max. Quantity	Shipment (Business Days)
R978041747	CBDT-11A-A/S08	10	10 day(s)
R978041748	CBDT-11A-D/S08	10	10 day(s)
R978012829	CBT-11A-A/S08	10	10 day(s)
R978012838	CBT-11A-D/S08	10	10 day(s)
R978041744	CBT-2A-A/S10	10	10 day(s)
R978041745	CBT-2A-D/S10	10	10 day(s)

GoTo Focused Delivery Program: Compact Hydraulics

Cartridge Accessories

See Technical Data for more information.

For complete engineering and design information: ***GoTo www.boschrexroth-us.com/GoTocompact***

Features

- See Technical Data for more information.

Applicable Valves	Voltage (V)	Connector Type	Material Description	Material No.
R7, On/Off Coil	12 VDC	DEUTSCH DT04-2P-V	OD0221203POB00 R7-DTV-12VDC-18W-CL.H	R934003919
S5, On/Off Coil	12 VDC	DIN plug	OD02090130OB01 S5L35HRL-12VDC-23W-CL.-H	R901090827
S5, On/Off Coil	24 VDC	DIN plug	OD02090130OC01 S5L45HRL-24VDC-23W-CL.-H	R901090828
S5, On/Off Coil	12 VDC	DEUTSCH DT04-2P-V	OD0209203POB01 S5L45DTV-12VDC-23W-CL.H	R901110011
S5, On/Off Coil	12 VDC	DEUTSCH DT04-2P-V	OD0209223POB01 S5L45DTV-12VDC-23W-DIODE&	R901090829
All sizes of poppet cartridges & S8 spool cartridges	14 VDC	DIN plug	OD02170130OG00 S8.356HRL-14DC-20W-CL.H	R901144215
All sizes of poppet cartridges & S8 spool cartridges	12 VDC	SINGLE LEAD	OD02170H03OB00 S8.356GNL-12DC-20W-L300-&	R901130402

Note: Connector for 110VAC coils is available separately, material no. R934004352

Part Number	Description	Max. Quantity	Shipment (Business Days)
R901090827	OD02090130OB01 S5L35HRL-12VDC-23W-CL.-H	10	10 day(s)
R901090828	OD02090130OC01 S5L45HRL-24VDC-23W-CL.-H	10	10 day(s)
R901110011	OD0209203POB01 S5L45DTV-12VDC-23W-CL.H	10	10 day(s)
R901090829	OD0209223POB01 S5L45DTV-12VDC-23W-DIODE	10	10 day(s)
R901144215	OD02170130OG00 S8.356HRL-14DC-20W-CL.H	10	10 day(s)
R901130402	OD02170H03OB00 S8.356GNL-12DC-20W-L300-	10	10 day(s)
R934003919	OD0221203POB00 R7-DTV-12VDC-18W-CL.H	10	10 day(s)

GoTo Focused Delivery Program: Compact Hydraulics

Flow Diverters - 3-Way, 2-Position, direct acting

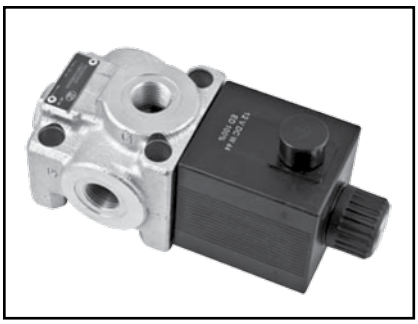

See Technical Data for more information.

For complete engineering and design information: ***GoTo www.boschrexroth-us.com/GoTocompact***

Features

- Ports:
- 1 1/16" - 12 UN-2B (SEA12)
- Detailed information: RE18302-03

3-way, 2-position directional spool valve, direct acting

Symbol	Type	Code	Max. Pressure PSI (bar)	Max. Flow GPM (L/min)	Ports	Data Sheet
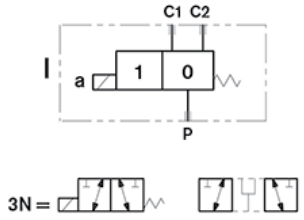	L706...	VS95	3625 (250)	37 (140)	1 1/16"-12 UN-2B (SAE12)	RE 18302-03

Part Number	Description	Max. Quantity	Shipment (Business Days)
R933001723	L706E143NIOB070-SE.VS95-SAE12-DZ-AN-DI-	10	10 day(s)

GoTo Focused Delivery Program: Compact Hydraulics

Flow Diverters - 6-Way, 2-Postion, direct acting

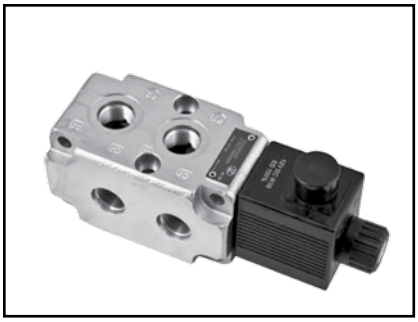

See Technical Data for more information.

For complete engineering and design information: ***GoTo www.boschrexroth-us.com/GoTocompact***

Features

- Ports:
- 3/4" - 16 UNF (SAE8)
- 7/8" - 14 UNF (SAE10)
- Detailed Information: RE18302-09, RE18302-10

6-way, 2-position directional spool valve, direct acting

Symbol	Type	Code	Max. Pressure PSI (bar)	Max. Flow GPM (L/min)	Ports	Data Sheet
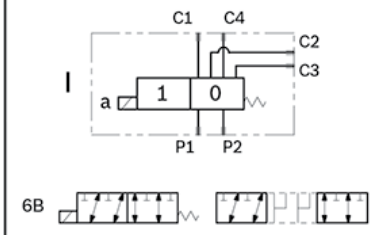	L732...	VS245F1	3625 (250)	13 (50)	3/4"-16 UNF (SAE8)	RE 18302-09
	L745...	VS285F1	3625 (250)	24 (90)	7/8-14 UNF (SAE10)	RE 18302-10

Part Number	Description	Max. Quantity	Shipment (Business Days)
R933000010	L732C116BIOB010-S.VS245F1-SAE8-DZ-P1C1N	10	10 day(s)
R933000013	L745D136BI00000-KS.VS285F1-SAE10-DZ-P1C	10	10 day(s)
R933002063	L745D136BIOB070-S.VS285F1-SAE10-DZ-P1C1	10	10 day(s)

GoTo Focused Delivery Program: Compact Hydraulics

Inlet Plates - Inlet Plate, basic (TA-00)

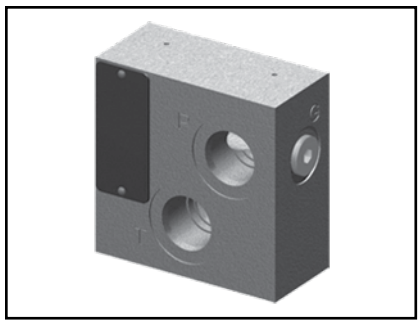

The inlet elements TA-00- are employed to connect the external P, T lines to the P, T channels inside the ED elements of the Directional Valve Assembly and to connect to the LS ports of the elements equipped with LS channels.

For complete engineering and design information: ***GoTo www.boschrexroth-us.com/GoTocompact***

Features

- Port sizes: P and T - SAE 8; LS and G - SAE 4.
- Includes a test point port “G” for pressure gauge connection.
- Special plating and coating available, C.F.

Technical Data

Maximum pressure	bar (PSI)	210 (3000)*
Maximum inlet flow	l/min (GPM)	60 (15)
Material		Aluminum
Seals		NBR
Fluide temperature	°C (°F)	–20 to +80 (–4 to +176)

*For higher pressure, C.F.

Part Number	Description	Max. Quantity	Shipment (Business Days)
R987271816	TA0056	10	10 day(s)

GoTo Focused Delivery Program: Compact Hydraulics

Inlet Plates - Inlet Plate, relief (TA-04)

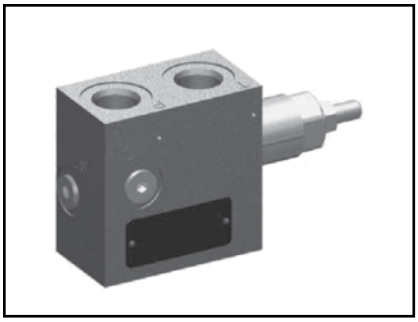

The inlet elements TA-04-_ are employed to connect the external P, T lines to the P, T channels inside the ED elements of the Directional Valve Assembly and to connect to the LS ports of the elements equipped with LS channels. They incorporate a pressure relief cartridge which limits the maximum primary pressure in the P line and unloads any excess flow to the Tank.

For complete engineering and design information: ***GoTo www.boschrexroth-us.com/GoTocompact***

Features

- Port sizes: P and T - SAE 8; LS and G - SAE 4
- Special plating and coating availabe, C.F.
- Detailed information: RA18300-02

Technical Data

Maximum pressure	bar (PSI)	210 (3000)*
Maximum inlet flow	l/min (GPM)	60 (15)
Material		Aluminum
Seals		NBR
Fluide temperature	°C (°F)	–20 to +80 (–4 to +176)

*For higher pressure, C.F.

Part Number	Description	Max. Quantity	Shipment (Business Days)
R987271818	TA04562D	10	10 day(s)
R987271821	TA04562P	10	10 day(s)
R987271819	TA04563D	10	10 day(s)
R987271822	TA04563P	10	10 day(s)

GoTo Focused Delivery Program: Compact Hydraulics

Inlet Plates - Inlet Plate, relief and dump (TA-05)

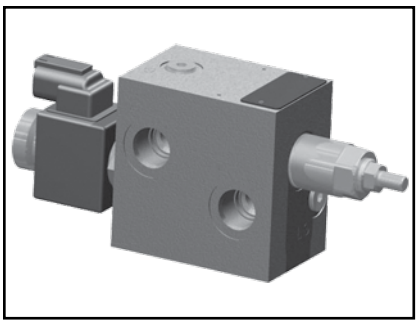

The inlet elements TA-05-are employed to connect the external P and T lines to the P and T channels inside the ED elements of the Directional Valve Assembly. They incorporate a pressure relief cartridge which limits the primary pressure in the P line. The relief setting can be checked through the Test Point port G.
When fitted, the Normally Open Solenoid Unloading VEI Cartridge unloads to Tank all the P line flow; unloading stops when the cartridge coil is energized.

For complete engineering and design information: ***GoTo www.boschrexroth-us.com/GoTocompact***

Features

- Port sizes: P and T - SAE 8; LS and G - SAE 4.
- Ports LS and G are provided with plugs.
- Special plating and coating available, C.F.
- Detailed Information: RA18300-05

Technical Data

Maximum pressure	bar (PSI)	210 (3000)*
Maximum inlet flow	l/min (GPM)	60 (15)
Material		Aluminum
Seals		Buna N (NBR)
Fluide temperature	°C (°F)	–20 to +80 (–4 to +176)

*For higher pressure, C.F.

Part Number	Description	Max. Quantity	Shipment (Business Days)
R987271828	TA05562D0000A	10	10 day(s)
R987271843	TA05562P0000A	10	10 day(s)
R987271833	TA05563D0000A	10	10 day(s)

GoTo Focused Delivery Program: Compact Hydraulics

Inlet Plates - Inlet Plate, compensator (TA-06)

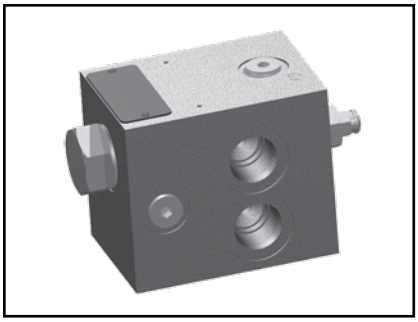

The inlet elements TA-06-__ are employed to connect the external P, T lines to the P, T channels inside the ED elements of the Directional Valve Assembly and to connect to the LS ports of the elements equipped with LS channels. An LS controlled 3-way compensator provides pressure compensated flow to the ED elements of the Directional Valve Assembly. The same 3-way compensator is also controlled by a pilot relief cartridge and unloads to tank any excess flow in order to limit the primary pressure in the system.

For complete engineering and design information: ***GoTo www.boschrexroth-us.com/GoTocompact***

Features

- Port sizes: P and T - SAE 8; LS and G - SAE 4
- Ports LS and G are provided with plugs
- Special plating and coating available, C.F.
- Detailed Information: RA18300-06

Technical Data

Maximum pressure	bar (PSI)	210 (3000)*
Maximum inlet flow	l/min (GPM)	60 (15)
Material		Aluminum
Seals		Buna N (NBR)
Fluid temperature	°C (°F)	–20 to +80 (–4 to +176)

*For higher pressure, C.F.

Part Number	Description	Max. Quantity	Shipment (Business Days)
R987280652	TA06562D140	10	10 day(s)
R987391834	TA06562D170	10	10 day(s)
R987280653	TA06563D140	10	10 day(s)
R978056725	TA06563D170	10	10 day(s)

GoTo Focused Delivery Program: Compact Hydraulics

Inlet Plates - Inlet Plate, LS proportional flow control with unloading valve (TA-10)

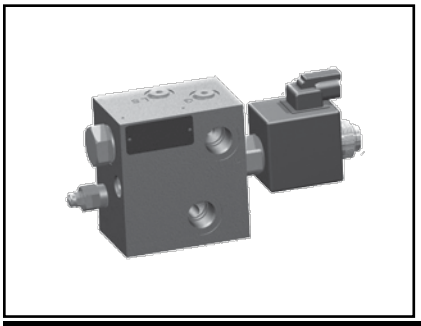

The inlet elements TA-10-__ are employed to connect the external P, T lines to the P, T channels inside the ED elements of the Directional Valve Assembly and to connect to the LS ports of the ED elements equipped with LS channels. The main functions are: to limit the maximum primary pressure in the P line and to supply proportional pressure compensated flow the ED elements of the Directional Valve Assembly.

For complete engineering and design information: ***GoTo www.boschrexroth-us.com/GoTocompact***

Features

- Port sizes: P and T - SAE 8; LS and G - SAE 4
- Ports LS and G are provided with plugs
- Special plating and coating available, C.F.
- Detailed information: RA18300-09

Technical Data

Maximum pressure	bar (PSI)	210 (3000)*
Maximum inlet flow	l/min (GPM)	40 (11)
Material		Aluminum
Seals		Buna N (NBR)
Fluide temperature	°C (°F)	–20 to +80 (–4 to +176)

*For higher pressure, C.F.

Part Number	Description	Max. Quantity	Shipment (Business Days)
R987280675	TA10562D0000A01L	10	10 day(s)
R987280678	TA10562D0000A02L	10	10 day(s)
R987280681	TA10562D0000A03L	10	10 day(s)

GoTo Focused Delivery Program: Compact Hydraulics

Bankable Directional Valves - 4/3 Directional Valve Elements, with PO check valves - B8_45 (EDBY-VR)

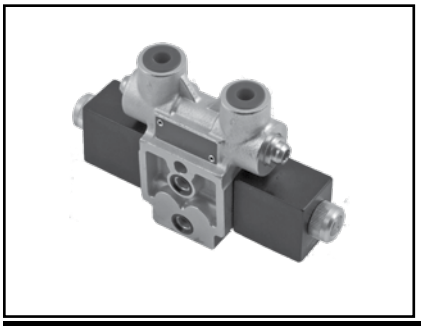

Directional valve elements B8_45... are compact direct-operated solenoid valves which control the start, stop and direction of the oil flow. These elements consist of a stackable housing with a control spool, two solenoids, and two return springs. The upper part of the housing is extended in order to provide space for the cavities where two PO check valves are fitted. They consist of two calibrated balls with return springs that allow upstream flow, but lock on the respective seats and prevent the return flow. Return flow is possible when they are opened by the pilot piston if enough pilot pressure is present in the opposite line.

For complete engineering and design information: ***GoTo www.boschrexroth-us.com/GoTocompact***

Features

- Valve elements with 4 ways and 3 positions
- Control spools directly operated by screwed-in solenoids with extractable coils
- In the de-energized condition, the control spool is held in the central position by return springs
- Wet pin tubes for DC coils, with push rod for mechanical override; burnish surface treatment
- Detailed Information: RA18300-51

Technical Data

General		
Weight	kg (lbs)	1.6 (3.5)
Ambient Temperature	°C (°F)	–20....+50 (–4....+120) [NBR seals]

Hydraulic		
Maximum pressure (P, A, and B ports)	bar (PSI)	250 (3600)
Maximum dynamic pressure (T)	bar (PSI)	150 (2176)
Maximum static pressure (T)	bar (PSI)	210 (3045)
Maximum inlet flow	l/min (GPM)	15 (4)
Hydraulic fluid General properties: it must have physical lubricating and chemical properties suitable for use in hydraulic systems such as, for example:		Mineral oil based hydraulic fluids HL (DIN 51524 part 1). Mineral oil based hydraulic fluids HLP (DIN 51524 part 2). For use of environmentally acceptable fluids (vegetable or polyglycol base) please consult us.
Fluid Temperature	°C (°F)	–20....+80 (–4....+176) [NBR seals]
Permissible degree of fluid contamination		ISO 4572: $\beta_x \geq 75$ X=12...15 ISO 4406: classe 20/18/15 NAS 1638: classe 9
Viscosity range	mm^2/s	5....420

Part Number	Description	Max. Quantity	Shipment (Business Days)
R933003656	B8045B2010000B330-KE.EDB-Y-VR3/AB-SAE6-	10	10 day(s)
R933003658	B8045E2010000B330-KE.EDB-Y-VR3/AB-SAE6-	10	10 day(s)

GoTo Focused Delivery Program: Compact Hydraulics

Bankable Directional Valves - 4/3 Directional Valve Elements - B8_08 (EDBZ)

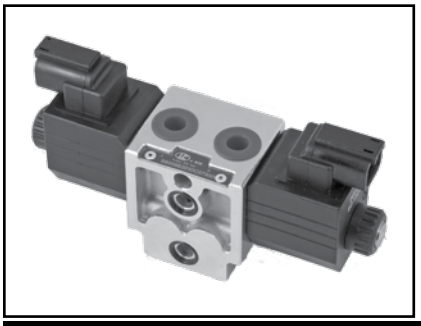

Directional valve elements B8_08... are compact direct-operated solenoid valves which control the start, stop and direction of the oil flow. These elements consist of a stackable housing with a control spool, two solenoids, and two return springs. When energized, the force of the solenoid pushes the control spool from its neutral-central position “0” to the required end position “a” or “b”, and the required flow from P to A (with B to T), or P to
B (with A to T) is achieved. Once the solenoid is de-energized, the return spring (4) pushes the spool thrust washer (3) back against the housing and the spool returns in its neutral-central position.

For complete engineering and design information: ***GoTo www.boschrexroth-us.com/GoTocompact***

Features

- Valve elements with 4 ways and 3 positions
- Control spools directly operated by screwed-in solenoids with extractable coils
- In the de-energized condition, the control spool is held in the central position by return springs
- Wet pin tubes for DC coils, with push rod for mechanical override; burnish surface treatment
- Detailed Information: RA18300-52

Technical Data

General		
Weight (valve element with 2 solenoids)	kg (lbs)	1.34 (2.95)
Weight (valve element with 1 solenoid)	kg (lbs)	1.06 (2.34)
Ambient Temperature	°C (°F)	−20....+50 (−4....+120) [NBR seals]

Hydraulic		
Maximum pressure (P, A, and B ports)	bar (PSI)	310 (4500)
Maximum dynamic pressure (T)	bar (PSI)	180 (2610)
Maximum static pressure (T)	bar (PSI)	210 (3045)
Maximum inlet flow	l/min (GPM)	25 (6.6)
Hydraulic fluid General properties: it must have physical lubricating and chemical properties suitable for use in hydraulic systems such as, for example:		Mineral oil based hydraulic fluids HL (DIN 51524 part 1). Mineral oil based hydraulic fluids HLP (DIN 51524 part 2). For use of environmentally acceptable fluids (vegetable or polyglycol base) please consult us.
Fluid Temperature	°C (°F)	−20....+80 (−4....+176) [NBR seals]
Permissible degree of fluid contamination		ISO 4572: $\beta_x \geq 75$ X=12...15 ISO 4406: classe 20/18/15 NAS 1638: classe 9
Viscosity range	mm^2/s	5....420

Part Number	Description	Max. Quantity	Shipment (Business Days)
R930055574	B8008A2010000B000-KE.EDB-Z-SAE6-A201-N	10	10 day(s)
R933006754	B8008B2010000B000-KE.EDB-Z-SAE6-B201-N	10	10 day(s)
R930055576	B8008E2010000B000-KE.EDB-Z-SAE6-E201-N	10	10 day(s)
R930053105	B8008Y3010000B000-KE.EDB-Z-SAE6-Y301-N	10	10 day(s)

GoTo Focused Delivery Program: Compact Hydraulics

Bankable Directional Valves - 4/3 - 4/2 Directional Valve Elements - L8_10 (ED1) and L8_11 (ED2-DZ)

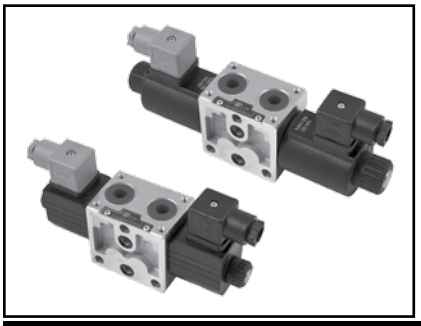

The sandwich plate design directional valve elements L8_10... and L8_11... are compact direct operated solenoid valves which control the start, stop, and the direction of the oil flow.

For complete engineering and design information: ***GoTo www.boschrexroth-us.com/GoTocompact***

Features

- Valve elements with solenoid operated directional spool
- Control spools operated by screwed-in solenoids with extractable coils
- In the de-energized condition, the control spool is held in the central position by return springs
- Wet pin tubes for DC coils, with push rod for mechanical override; nickel plated surface
- Coils can be rotated 360° around the tube; they can be energized by AC current through special connectors with rectifier (RAC)
- Manual override (push-button or screw type) available upon request
- Plug-in connectors available; EN 175301-803 (was DIN 43650); AMP Junior;
- DT04-2P (Deutsch), free leads
- Detailed Information: RA18301-01(L8_10), RA18301-02 (L8_11)

Technical Data

Model		L8_10...	L8_11...
General			
Valve element with 2 solenoids	kg (lbs)	1.55 (3.42)	1.95 (4.3)
Valve element with 1 solenoid	kg (lbs)	1.25 (2.76)	1.45 (3.2)
Valve element with 2 solenoid with lever override	kg (lbs)	1.9 (4.2)	2.2 (4.85)
Valve element with 1 solenoid with lever override	kg (lbs)	1.6 (3.5)	1.7 (3.75)
Hydraulic			
Maximum pressure (P, A, and B ports)	bar (PSI)	310 (4500)	
Maximum dynamic pressure (T)	bar (PSI)	180 (2610)	250 (3625)
Maximum dynamic pressure, with lever override (T)	bar (PSI)	100 (1450)	
Maximum static pressure (T)	bar (PSI)	210 (3045)	310 (4500)
Maximum inlet flow	l/min (GPM)	30 (7.9)	50 (13.2)
Hydraulic fluid General properties: it must have physical lubricating and chemical properties suitable for use in hydraulic systems such as, for example:		Mineral oil based hydraulic fluids HL (DIN 51524 part 1). Mineral oil based hydraulic fluids HLP (DIN 51524 part 2). For use of environmentally acceptable fluids (vegetable or polyglycol base) please consult us.	
Fluid Temperature	°C (°F)	–20....+80 (–4....+176) [NBR seals]	
Permissible degree of fluid contamination		ISO 4572: $\beta_x \geq 75$ X=12...15 ISO 4406: class 20/18/15 NAS 1638: class 9	
Viscosity range	mm^2/s	5....420	

Part Number	Description	Max. Quantity	Shipment (Business Days)
R933003502	L8010A201000030-KE.ED1-Z-SAE8-PT9-A201-N	10	10 day(s)
R930055598	L8010A201000030HA-KE.ED1-Z-SAE8-A201-EL	10	10 day(s)
R933002825	L8010B201000030	10	10 day(s)
R930055600	L8010B201000030HA-KE.ED1-Z-SAE8-B201-EL	10	10 day(s)
R933003504	L8010E201000030	10	10 day(s)
R930055617	L8010E201000030HA-KE.ED1-Z-SAE8-E201-EL	10	10 day(s)
R930055619	L8010Y301000030-KE.ED1-Z-SAE8-Y301-N	10	10 day(s)
R930055621	L8010Y301000030HA-KE.ED1-Z-SAE8-Y301-EL	10	10 day(s)
R930055623	L8011A201000030HA-KE.ED2-SAE8-A201-ELHA	10	10 day(s)
R930055625	L8011B201000030HA-KE.ED2-SAE8-B201-ELHA	10	10 day(s)
R930055628	L8011E201000030HA-KE.ED2-SAE8-E201-ELHA	10	10 day(s)
R930055630	L8011Y301000030-KE.ED2-DZ-SAE8-Y301-N	10	10 day(s)
R930055632	L8011Y301000030HA-KE.ED2-SAE8-Y301-ELHA	10	10 day(s)

GoTo Focused Delivery Program: Compact Hydraulics

Bankable Directional Valves - 4/3 Proportional Valve Elements - L8_80 (ED4-P)

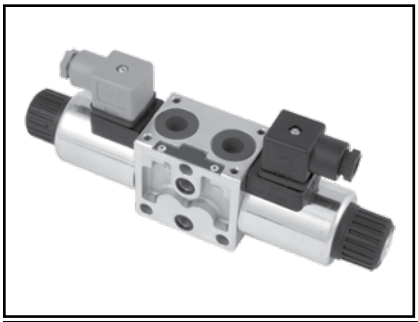

The sandwich plate design directional valve elements L8080... are compact direct operated proportional solenoid valves which control the start, the stop, the direction and the quantity of the oil flow.

For complete engineering and design information: ***GoTo www.boschrexroth-us.com/GoTocompact***

Features

- Valve element with direct proportional control of spool
- Control spool operated by screwed-in solenoid with extractable coil
- In the de-energized condition, the control spool is held in the central position by return springs
- Wet pin proportional tubes for DC coils, with push rod for mechanical override; nickel plated surface
- Manual override (push-button or screw type) available upon request
- Plug-in connectors available: EN 175301-803 (Was DIN 43650) and DT04-2P (Deutsch)
- Detailed Information: RA18301-06

Technical Data

General		
Weight (valve element with 2 solenoids)	kg (lbs)	2.20 (4.85)
Weight (valve element with 1 solenoid)	kg (lbs)	1.70 (3.75)
Ambient Temperature	°C (°F)	–20....+50 (–4....+122) [NBR seals]

Hydraulic		
Maximum pressure (P)	bar (PSI)	310 (4500)
Maximum dynamic pressure (T)	bar (PSI)	210 (3050)
Maximum static pressure (T)	bar (PSI)	250 (3625)
Maximum inlet flow	l/min (GPM)	45 (11.9)
Nominal flow with $\Delta P = 10$ bar	l/min (GPM)	10, 20, 30 (2.64, 5.28, 7.9)
Hydraulic fluid General properties: it must have physical lubricating and chemical properties suitable for use in hydraulic systems such as, for example:		Mineral oil based hydraulic fluids HL (DIN 51524 part 1). Mineral oil based hydraulic fluids HLP (DIN 51524 part 2). For use of environmentally acceptable fluids (vegetable or polyglycol base) please consult us.
Fluid Temperature	°C (°F)	–20....+80 (–4....+176) [NBR seals]
Permissible degree of fluid contamination		ISO 4572: $\beta_x \geq 75$ X=12...15 ISO 4406: class 20/18/15 NAS 1638: class 9
Viscosity range	mm^2/s	20....380 (optimal 30....46)

Part Number	Description	Max. Quantity	Shipment (Business Days)
R930061802	L8081B2S4000030HA-KE.ED4-P1-SAE8-B2S4-E	10	10 day(s)
R930061807	L8081E2S4000030-KE.ED4-P1-SAE8-PT9-E2S4	10	10 day(s)
R930061806	L8081E2S4000030HA-KE.ED4-P-SAE8-E2S4-EL	10	10 day(s)
R930061809	L8081E2S6000030-KE.ED4-P1-SAE8-PT9-E2S6	10	10 day(s)
R930061808	L8081E2S6000030HA-KE.ED4-P1-SAE8-E2S6-E	10	10 day(s)

GoTo Focused Delivery Program: Compact Hydraulics

Bankable Directional Valves - 4/3 Lever Operated Directional Valve Elements - L8_L1 (ED-LV)

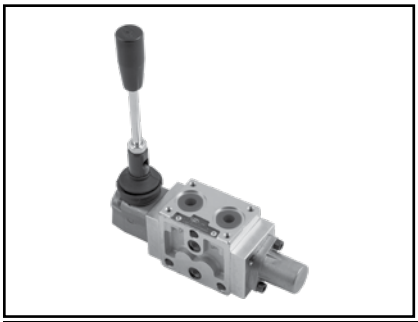

Directional valve elements L8_1... are compact manual operated valves which control the start, the stop and the direction of the oil flow. The hand operated lever moves the control spool from its neutral-central position “0” to the required position “a” or “b”, and the required flow from P to A (with B to T), or P to B (with A to T) is achieved.

For complete engineering and design information: ***GoTo www.boschrexroth-us.com/GoTocompact***

Features

- Valve elements with 4 ways and 3 positions
- Control spools manual operated by hand lever
- Control spool with return spring or mechanical detent for all three positions.
- Detailed information: RA18301-10

Technical Data

General		
Weight	kg (lbs)	1.55 (3.42)
Mounting position	kg (lbs)	Unrestricted
Ambient Temperature	°C (°F)	–20....+50 (–4....+122) [NBR seals]

Hydraulic		
Maximum pressure (P)	bar (PSI)	310 (4500)
Maximum static pressure (T)	bar (PSI)	180 (2610)
Maximum inlet flow	l/min (GPM)	60 (15.9)
Nominal flow with $\Delta P = 10$ bar	l/min (GPM)	10, 20, 30 (2.64, 5.28, 7.9)
Hydraulic fluid General properties: it must have physical lubricating and chemical properties suitable for use in hydraulic systems such as, for example:		Mineral oil based hydraulic fluids HL (DIN 51524 part 1). Mineral oil based hydraulic fluids HLP (DIN 51524 part 2). For use of environmentally acceptable fluids (vegetable or polyglycol base) please consult us.
Fluid Temperature	°C (°F)	–20....+80 (–4....+176) [NBR seals]
Permissible degree of fluid contamination		ISO 4572: $\beta_x \geq 75$ X=12...15 ISO 4406: class 20/18/15 NAS 1638: class 9
Viscosity range	mm^2/s	20....380 (optimal 30....46)

Part Number	Description	Max. Quantity	Shipment (Business Days)
R933007171	L80L1A2S8A0M130-EV.ED-LV-SAE8-A2S8-LATO	10	10 day(s)
R930055678	L80L1B2S4A0M130-EV.ED-LV-SAE8-B2S4-LATO	10	10 day(s)
R933007648	L80L1B2S8A0M130-EV.ED-LV-SAE8-B2S8-LATO	10	10 day(s)
R930055682	L80L1E2S4A0M130-EV.ED-LV-SAE8-E2S4-LATO	10	10 day(s)
R933007304	L80L1E2S8A0M130-EV.ED-LV-SAE8-E2S8-LATO	10	10 day(s)

GoTo Focused Delivery Program: Compact Hydraulics

Bankable Directional Valves - 4/2, 4/3 LUDV Flow Sharing Directional Valve Elements - L8511 (EDC-DZ)

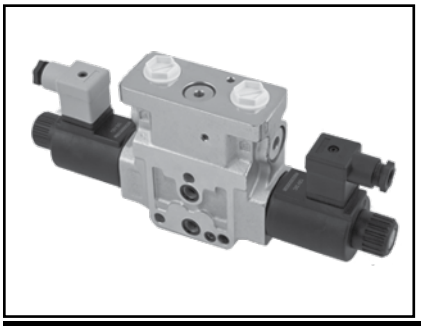

Directional valve elements L8511... are compact direct operated pressure compensated solenoid valves which operate with a flow sharing principle. They consist of a stackable housing with control spool, two solenoids, and two return springs. When energized, each solenoid displaces the control spool from its neutral-central position “0” and the metering notches are open; flow is delivered to the 3-way pressure compensator followed by a check valve for each port A and B. The compensator, balanced by the LS pressure at the opposite end, lifts up and unloads a pressure compensated fl ow which is sent to the A (or B) port through the relevant check valve; at the same time the opposite port allows oil return to tank.

For complete engineering and design information: ***GoTo www.boschrexroth-us.com/GoTocompact***

Features

- Valve element with direct on-off flow sharing control
- It can achieve multiple simultaneous maneuvers by distributing the available flow to each actuator selected by the operator, independently from the working pressure required
- All simultaneous movements go on at the same reduced speed in case of flow shortage
- Each energized actuator receives a pressure compensated flow
- Detailed Information: RA 18301-11

Technical Data

General		
Weight (valve element with 2 solenoids)	kg (lbs)	1.34 (2.95)
Weight (valve element with 1 solenoid)		1.06 (2.34)
Ambient Temperature	°C (°F)	−20....+50 (−4....+120) [NBR seals]

Hydraulic		
Maximum pressure (P, A, and B ports)	bar (PSI)	310 (4500)
Maximum pressure (T)	bar (PSI)	210 (3045)
Maximum flow	l/min (GPM)	48 (12.7)
Hydraulic fluid General properties: it must have physical lubricating and chemical properties suitable for use in hydraulic systems such as, for example:		Mineral oil based hydraulic fluids HL (DIN 51524 part 1). Mineral oil based hydraulic fluids HLP (DIN 51524 part 2). For use of environmentally acceptable fluids (vegetable or polyglycol base) please consult us.
Fluid Temperature	°C (°F)	−20....+80 (−4....+176) [NBR seals]
Permissible degree of fluid contamination		ISO 4572: $\beta_x \geq 75$ X=12...15 ISO 4406: classe 20/18/15 NAS 1638: classe 9
Viscosity range	mm^2/s	5....420

Part Number	Description	Max. Quantity	Shipment (Business Days)
R930055684	L8511B2S800003000-KE.EDC-DZ-SAE8-B2S8-N	10	10 day(s)
R930053109	L8511B2S900003000-KE.EDC-DZ-SAE8-B2S9-N	10	10 day(s)
R930055692	L8511B2S9000030HA-KE.EDC-DZ-SAE8-B2S9-E	10	10 day(s)
R933008803	L8511B2S90000M000-KE.EDC-DZ-MOD-B2S9-N	10	10 day(s)
R930055694	L8511B2S90000M0HA-KE.EDC-DZ-MOD-B2S9-EL	10	10 day(s)
R930055695	L8511E2S800003000-KE.EDC-DZ-SAE8-E2S8-N	10	10 day(s)
R930055681	L8511E2S8000030HA-KE.EDC-DZ-SAE8-E2S8-E	10	10 day(s)
R933008799	L8511E2S80000M000-KE.EDC-DZ-MOD-E2S8-N	10	10 day(s)
R930055690	L8511E2S80000M0HA-KE.EDC-DZ-MOD-E2S8-EL	10	10 day(s)

GoTo Focused Delivery Program: Compact Hydraulics

Bankable Directional Valves - 4/3, 4/2 LUDV Proportional Flow Sharing Valve Elements - L8580 (EDC-P)

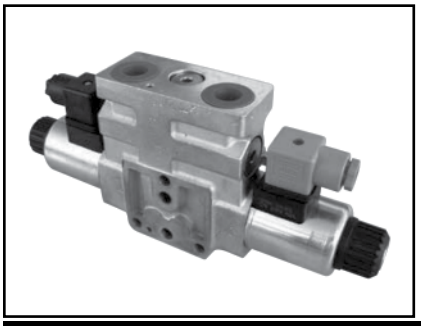

The sandwich plate design directional valve elements L8580... are compact direct operated pressure compensated proportional solenoid valves which control the start, the stop, the direction and the quantity of the oil flow, with a Flow Sharing principle.

For complete engineering and design information: ***GoTo www.boschrexroth-us.com/GoTocompact***

Features

- Valve element with direct proportional flow sharing control
- It can achieve simultaneous activation of different actuators by distributing the available flow proportionally to the speeds selected by the operator
- Optional hand lever for dual electric and manual operation
- Manual override (push-button, screw type or lever) available upon request
- Detailed Information: RA 18301-09

Technical Data

General		
Weight (valve element with 2 solenoids)	kg (lbs)	3.95 (8.71)
Weight valve element with 1 solenoid)	kg (lbs)	3.6 (7.91)
Ambient temperature	°C (°F)	–20....+50 (–4....+122)

Hydraulic		
Maximum pressure (P, A, and B ports)	bar (PSI)	310 (4500)
Maximum pressure (T)	bar (PSI)	210 (3045)
Maximum pressure with lever emergency (T)	bar (PSI)	140 (2030)
Max regulated flow at 14 bar (203 PSI)	°C (°F)	40, 50 (10.5, 13.2)
Max regulated flow at 18 bar (261 PSI)	°C (°F)	46, 58 (12.1, 15.3)
Hydraulic fluid General properties: it must have physical lubricating and chemical properties suitable for use in hydraulic systems such as, for example:		Mineral oil based hydraulic fluids HL (DIN 51524 part 1). Mineral oil based hydraulic fluids HLP (DIN 51524 part 2). For use of environmentally acceptable fluids (vegetable or polyglycol base) please consult us.
Fluid Temperature	°C (°F)	–20....+80 (–4....+176) [NBR seals]
Permissible degree of fluid contamination		ISO 4572: $\beta_x \geq 75$ X=12...15 ISO 4406: class 20/18/15 NAS 1638: class 9
Viscosity range	mm^2/s	20....380 (optimal 30....46)

Part Number	Description	Max. Quantity	Shipment (Business Days)
R930061819	L8581B2S400003000-KE.EDC-P1-SAE8-B2S4-N	10	10 day(s)
R930061820	L8581B2S4000030HA-KE.EDC-P1-SAE8-B2S4-E	10	10 day(s)
R930061821	L8581B2S40000M000-KE.EDC-P1-MOD-B2S4-N	10	10 day(s)
R930061822	L8581B2S40000M0HA-KE.EDC-P1-MOD-B2S4-EL	10	10 day(s)
R930061823	L8581B2S800003000-KE.EDC-P1-SAE8-B2S8-N	10	10 day(s)
R930061824	L8581B2S8000030HA-KE.EDC-P1-SAE8-B2S8-E	10	10 day(s)
R930061825	L8581B2S80000M000-KE.EDC-P1-MOD-B2S8-N	10	10 day(s)
R930061826	L8581B2S80000M0HA-KE.EDC-P1-MOD-B2S8-EL	10	10 day(s)
R930061827	L8581B2S900003000-KE.EDC-P1-SAE8-B2S9-N	10	10 day(s)
R930061828	L8581B2S9000030HA-KE.EDC-P1-SAE8-B2S9-E	10	10 day(s)
R930061829	L8581B2S90000M000-KE.EDC-P1-MOD-B2S9-N	10	10 day(s)
R930061833	L8581E2S800003000-KE.EDC-P1-SAE8-E2S8-N	10	10 day(s)
R930061834	L8581E2S8000030HA-KE.EDC-P1-SAE8-E2S8-E	10	10 day(s)
R930061835	L8581E2S80000M000-KE.EDC-P1-MOD-E2S8-N	10	10 day(s)
R930061836	L8581E2S80000M0HA-KE.EDC-P1-MOD-E2S8-EL	10	10 day(s)
R930061838	L8581E2S900003000-KE.EDC-P1-SAE8-E2S9-N	10	10 day(s)
R930061839	L8581E2S9000030HA-KE.EDC-P1-SAE8-E2S9-E	10	10 day(s)
R930050996	L8581E2S90000M000-KE.EDC-P1-MOD-E2S9-N	10	10 day(s)
R930061841	L8581E2S90000M0HA-KE.EDC-P1-MOD-E2S9-EL	10	10 day(s)

GoTo Focused Delivery Program: Compact Hydraulics

Bankable Directional Valves - 4/3 Directional Valve Elements - D8_5 (EDD-XZ)

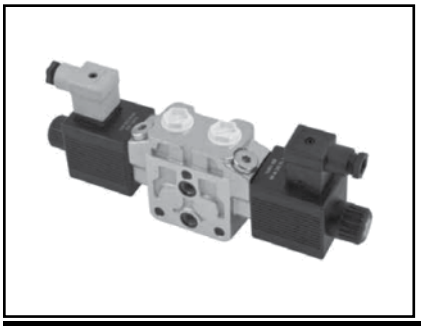

The sandwich plate design directional valve elements D8_5 are compact direct operated solenoid valves which control the start, the stop and the direction of the oil flow.

For complete engineering and design information: ***GoTo www.boschrexroth-us.com/GoTocompact***

Features

- Valve elements with solenoid operated directional spool
- Control spools directly operated by solenoids with removable coils
- In the de-energized condition, the control spool is held in the central position by return springs
- Manual override (push-button, screw type) available as option
- Optional anti-cavitation/relief function available
- Detailed information: RA 18301-12

Technical Data

General		
Weight with two solenoids	kg (lbs)	3.00 (6.61)
Weight with one solenoid	kg (lbs)	2.35 (5.18)
Ambient temperature	°C (°F)	–20....+50 (–4....+122)

Hydraulic		
Max pressure (P)	bar (psi)	310 (4500)
Max pressure (A and B ports)	bar (psi)	380 (5500)
Max pressure (T)	bar (psi)	250 (3625)
Max inlet flow	l/min (GPM)	80 (21.1)
Hydraulic fluid General properties: it must have physical lubricating and chemical properties suitable for use in hydraulic systems such as, for example:		Mineral oil based hydraulic fluids HL (DIN 51524 part 1). Mineral oil based hydraulic fluids HLP (DIN 51524 part 2). For use of environmentally acceptable fluids (vegetable or polyglycol base) please consult us.
Fluid Temperature	°C (°F)	–20....+80 (–4....+176) [NBR seals]
Permissible degree of fluid contamination		ISO 4572: $\beta_x \geq 75$ X=12...15 ISO 4406: class 20/18/15 NAS 1638: class 9
Viscosity range	mm^2/s	5....420

Part Number	Description	Max. Quantity	Shipment (Business Days)
R930052734	D805B2010000D00000-KE.EDD-XZ-SAE10-B201	10	10 day(s)
R930052760	D805E2010000D00000-KE.EDD-XZ-SAE10-E201	10	10 day(s)

GoTo Focused Delivery Program: Compact Hydraulics

Bankable Directional Valves - 4/3 Directional Valve Elements, with PO Check Valves- B8_48 (EDBZ-VR)

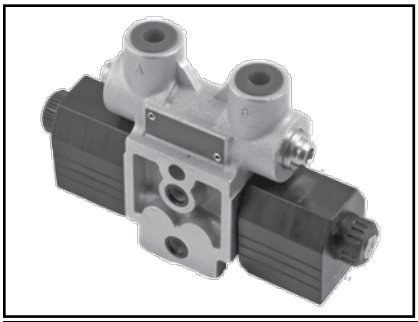

Directional valve elements B8_08... are compact direct-operated solenoid valves which control the start, stop and direction of the oil flow. These elements consist of a stackable housing with a control spool, two solenoids, and two return springs. When energized, the force of the solenoid pushes the control spool from its neutral-central position “0” to the required end position “a” or “b”, and the required flow from P to A (with B to T), or P to B (with A to T) is achieved. Once the solenoid is de-energized, the return spring (4) pushes the spool thrust washer (3) back against the housing and the spool returns in its neutral-central position.

For complete engineering and design information: ***GoTo www.boschrexroth-us.com/GoTocompact***

Features

- Control spools directly operated by screwed-in solenoids with extractable coils
- In the de-energized condition, the control spool is held in the central position by return springs
- Wet pin tubes for DC coils, with push rod for mechanical override; burnish surface treatment
- Single or Dual cross piloted check valves on A and B ports
- Detailed information: RA18300-53

Technical Data

General		
Weight (valve element with 2 solenoids)	kg (lbs)	1.75 (3.86)
Ambient Temperature	°C (°F)	–20....+50 (–4....+120) [NBR seals]

Hydraulic		
Maximum pressure (P, A, and B ports)	bar (PSI)	250 (3625)
Maximum dynamic pressure (T)	bar (PSI)	180 (2610)
Maximum static pressure (T)	bar (PSI)	210 (3045)
Maximum inlet flow	l/min (GPM)	20 (5.3)
Hydraulic fluid General properties: it must have physical lubricating and chemical properties suitable for use in hydraulic systems such as, for example:		Mineral oil based hydraulic fluids HL (DIN 51524 part 1). Mineral oil based hydraulic fluids HLP (DIN 51524 part 2). For use of environmentally acceptable fluids (vegetable or polyglycol base) please consult us.
Fluid Temperature	°C (°F)	–20....+80 (–4....+176) [NBR seals]
Permissible degree of fluid contamination		ISO 4572: $\beta_x \geq 75$ X=12...15 ISO 4406: classe 20/18/15 NAS 1638: classe 9
Viscosity range	mm^2/s	5....420

Part Number	Description	Max. Quantity	Shipment (Business Days)
R930055580	B8048B2010000B330-KE.EDB-Z-VR3/AB-SAE6-	10	10 day(s)
R933003707	B8048E2010000B330-KE.EDB-Z-VR3/AB-SAE6-	10	10 day(s)

GoTo Focused Delivery Program: Compact Hydraulics

Bankable Directional Valves - 4/3 Proportional Valve Elements - B8_80 (EDB-P)

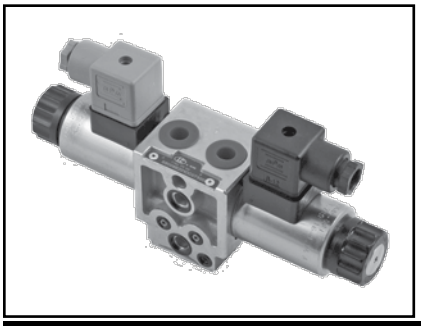

Valve elements B8080... are compact direct operated proportional solenoid valves which control the start, stop, direction and the quantity of the oil flow. They consist of a stackable housing with a control spool, one or two solenoids, and one or two return springs. Energized by an electronic feed regulator, each solenoid displaces the control spool from its neutral-central position “0” proportionally to the current received. In open loop mode, a regulated oil flow P to A , or P to B, is achieved.

For complete engineering and design information: ***GoTo www.boschrexroth-us.com/GoTocompact***

Features

- Control spools directly operated by screwed-in solenoids with extractable coils
- In the de-energized condition, the control spool is held in the central position by return springs
- Spool variants:
- B2: 4/3 operated both sides a and b; P -- T closed in neutral
- E2: 4/3 operated both sides a and b; A and B to T in neutral
- Detailed information: RA18300-55

Technical Data

General		
Weight (valve element with 2 solenoids)	kg (lbs)	1.5 (3.3)
Weight (valve element with 1 solenoid)	kg (lbs)	1.1 (2.5)
Ambient Temperature	°C (°F)	−20....+50 (−4....+120) [NBR seals]

Hydraulic		
Maximum pressure (P, A, and B ports)	bar (PSI)	310 (4500)
Maximum dynamic pressure (T)	bar (PSI)	180 (2610)
Maximum static pressure (T)	bar (PSI)	210 (3045)
Maximum inlet flow	l/min (GPM)	24 (6.3)
Hydraulic fluid General properties: it must have physical lubricating and chemical properties suitable for use in hydraulic systems such as, for example:		Mineral oil based hydraulic fluids HL (DIN 51524 part 1). Mineral oil based hydraulic fluids HLP (DIN 51524 part 2). For use of environmentally acceptable fluids (vegetable or polyglycol base) please consult us.
Fluid Temperature	°C (°F)	−20....+80 (−4....+176) [NBR seals]
Permissible degree of fluid contamination		ISO 4572: $\beta_x \geq 75$ X=12...15 ISO 4406: classe 20/18/15 NAS 1638: classe 9
Viscosity range	mm^2/s	20....380 (best 30....46)

Part Number	Description	Max. Quantity	Shipment (Business Days)
R930055582	B8080B2S50000B00Y-KE.EDB-P-SAE6-B2S5-N	10	10 day(s)
R930055584	B8080E2S50000B00Y-KE.EDB-P-SAE6-E2S5-N	10	10 day(s)

GoTo Focused Delivery Program: Compact Hydraulics

Bankable Directional Valves - Load Sensing - 4/3 LS Directional Valve Elements, with PO check valves - B8_45 (EDBY-VR)

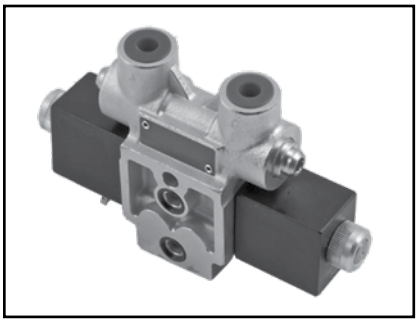

Directional valve elements B8_45... with LS connection are compact direct-operated solenoid valves which control the start, stop and direction of the oil flow. With the LS connection, pressure difference at the main spool, as well as the flow to the actuator, is maintained constant via the pressure compensator.

For complete engineering and design information: ***GoTo www.boschrexroth-us.com/GoTocompact***

Features

- Valve elements with 4 ways and 3 positions
- Control spools directly operated by screwed-in solenoids with extractable coils
- In the de-energized condition, the control spool is held in the central position by return springs
- Wet pin tubes for DC coils, with push rod for mechanical override; burnish surface treatment
- Single or Dual cross piloted checks on A and B ports
- Detailed information: RA 18300-51

Technical Data

General		
Weight	kg (lbs)	1.6 (3.5)
Ambient Temperature	°C (°F)	–20....+50 (–4....+120) [NBR seals]

Hydraulic		
Maximum pressure (P, A, and B ports)	bar (PSI)	250 (3600)
Maximum dynamic pressure (T)	bar (PSI)	150 (2176)
Maximum static pressure (T)	bar (PSI)	210 (3045)
Maximum inlet flow	l/min (GPM)	15 (4)
Hydraulic fluid General properties: it must have physical lubricating and chemical properties suitable for use in hydraulic systems such as, for example:		Mineral oil based hydraulic fluids HL (DIN 51524 part 1). Mineral oil based hydraulic fluids HLP (DIN 51524 part 2). For use of environmentally acceptable fluids (vegetable or polyglycol base) please consult us.
Fluid Temperature	°C (°F)	–20....+80 (–4....+176) [NBR seals]
Permissible degree of fluid contamination		ISO 4572: $\beta_x \geq 75$ X=12...15 ISO 4406: classe 20/18/15 NAS 1638: classe 9
Viscosity range	mm^2/s	5....420

Part Number	Description	Max. Quantity	Shipment (Business Days)
R933003660	B8445B2010000B330-KE.EDB-Y-LS-VR3/AB-SA	10	10 day(s)
R933003662	B8445E2010000B330-KE.EDB-Y-LS-VR3/AB-SA	10	10 day(s)

GoTo Focused Delivery Program: Compact Hydraulics

Bankable Directional Valves - Load Sensing - 4/3 Load Sensing Directional Valve Elements - B8_08 (EDBZ)

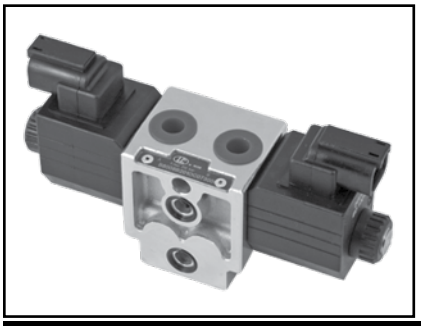

Directional valve elements B8_08... are compact direct-operated solenoid valves which control the start, stop and direction of the oil flow. These elements consist of a stackable housing with a control spool, two solenoids, and two return springs. With the LS connection, pressure difference at the main spool, as well as the flow to the actuator, is maintained constant via the pressure compensator.

For complete engineering and design information: ***GoTo www.boschrexroth-us.com/GoTocompact***

Features

- Valve elements with 4 ways and 3 positions
- Control spools directly operated by screwed-in solenoids with extractable coils
- In the de-energized condition, the control spool is held in the central position by return springs
- Wet pin tubes for DC coils, with push rod for mechanical override; burnish surface treatment
- Detailed Information: RA18300-52

Technical Data

General		
Weight (valve element with 2 solenoids)	kg (lbs)	1.34 (2.95)
Weight (valve element with 1 solenoid)	kg (lbs)	1.06 (2.34)
Ambient Temperature	°C (°F)	−20....+50 (−4....+120) [NBR seals]

Hydraulic		
Maximum pressure (P, A, and B ports)	bar (PSI)	310 (4500)
Maximum dynamic pressure (T)	bar (PSI)	180 (2610)
Maximum static pressure (T)	bar (PSI)	210 (3045)
Maximum inlet flow	l/min (GPM)	25 (6.6)
Hydraulic fluid General properties: it must have physical lubricating and chemical properties suitable for use in hydraulic systems such as, for example:		Mineral oil based hydraulic fluids HL (DIN 51524 part 1). Mineral oil based hydraulic fluids HLP (DIN 51524 part 2). For use of environmentally acceptable fluids (vegetable or polyglycol base) please consult us.
Fluid Temperature	°C (°F)	−20....+80 (−4....+176) [NBR seals]
Permissible degree of fluid contamination		ISO 4572: $\beta_x \geq 75$ X=12...15 ISO 4406: classe 20/18/15 NAS 1638: classe 9
Viscosity range	mm^2/s	5....420

Part Number	Description	Max. Quantity	Shipment (Business Days)
R930055586	B8408A2010000B000-KE.EDB-Z-LS-SAE6-A201	10	10 day(s)
R933006938	B8408B2010000B000-KE.EDB-Z-LS-SAE6-B201	10	10 day(s)
R930055588	B8408E2010000B000-KE.EDB-Z-LS-SAE6-E201	10	10 day(s)
R930055590	B8408Y3010000B000-KE.EDB-Z-LS-SAE6-Y301	10	10 day(s)

GoTo Focused Delivery Program: Compact Hydraulics

Bankable Directional Valves - Load Sensing - 4/3 LS Directional Valve Elements, with PO check valves - B8_48 (EDBZ-VR)

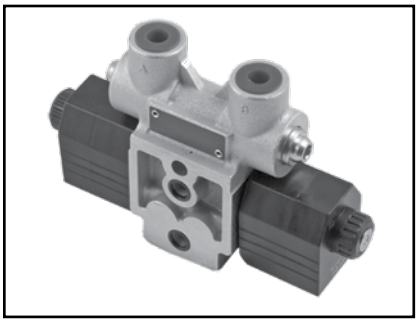

Directional valve elements B8_48... are compact direct-operated solenoid valves which control the start, stop and direction of the oil flow. These elements consist of a stackable housing with a control spool, two solenoids, and two return springs. With the LS connection, pressure difference at the main spool, as well as the flow to the actuator, is maintained constant via the pressure compensator.

For complete engineering and design information: ***GoTo www.boschrexroth-us.com/GoTocompact***

Features

- Valve elements with 4 ways and 3 positions
- Control spools directly operated by screwed-in solenoids with extractable coils
- In the de-energized condition, the control spool is held in the central position by return springs
- Wet pin tubes for DC coils, with push rod for mechanical override; burnish surface treatment
- Detailed information: RA 18300-53

Technical Data

General		
Weight (valve element with 2 solenoids)	kg (lbs)	1.75 (3.86)
Ambient Temperature	°C (°F)	–20....+50 (–4....+120) [NBR seals]

Hydraulic		
Maximum pressure (P, A, and B ports)	bar (PSI)	250 (3625)
Maximum dynamic pressure (T)	bar (PSI)	180 (2610)
Maximum static pressure (T)	bar (PSI)	210 (3045)
Maximum inlet flow	l/min (GPM)	20 (5.3)
Hydraulic fluid General properties: it must have physical lubricating and chemical properties suitable for use in hydraulic systems such as, for example:		Mineral oil based hydraulic fluids HL (DIN 51524 part 1). Mineral oil based hydraulic fluids HLP (DIN 51524 part 2). For use of environmentally acceptable fluids (vegetable or polyglycol base) please consult us.
Fluid Temperature	°C (°F)	–20....+80 (–4....+176) [NBR seals]
Permissible degree of fluid contamination		ISO 4572: $\beta_x \geq 75$ X=12...15 ISO 4406: classe 20/18/15 NAS 1638: classe 9
Viscosity range	mm^2/s	5....420

Part Number	Description	Max. Quantity	Shipment (Business Days)
R930055592	B8448B2010000B330-KE.EDB-Z-LS-VR3/AB-SA	10	10 day(s)
R933006937	B8448E2010000B330-KE.EDB-Z-LS-VR3/AB-SA	10	10 day(s)

GoTo Focused Delivery Program: Compact Hydraulics

Bankable Directional Valves - Load Sensing - 4/3 Load Sensing Proportional Valve Elements - B8_80 (EDB-P)

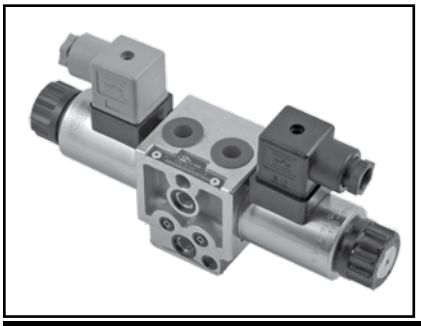

The sandwich plate design directional valve elements B8080... with LS connection are compact direct operated proportional solenoid valves which control the start, the stop, the direction and the quantity of the oil flow. With the LS connection, pressure difference at the main spool, as well as the flow to the actuator, is maintained constant via the pressure compensator.

For complete engineering and design information: ***GoTo www.boschrexroth-us.com/GoTocompact***

Features

- Valve element with direct proportional control of spool
- Control spool operated by screwed-in solenoid with extractable coil
- In the de-energized condition, the control spool is held in the central position by return springs
- Detailed information: RA 18300-55

Technical Data

General		
Weight (valve element with 2 solenoids)	kg (lbs)	1.5 (3.3)
Weight (valve element with 1 solenoid)	kg (lbs)	1.1 (2.5)
Ambient Temperature	°C (°F)	−20....+50 (−4....+120) [NBR seals]

Hydraulic		
Maximum pressure (P, A, and B ports)	bar (PSI)	310 (4500)
Maximum dynamic pressure (T)	bar (PSI)	180 (2610)
Maximum static pressure (T)	bar (PSI)	210 (3045)
Maximum inlet flow	l/min (GPM)	24 (6.3)
Hydraulic fluid General properties: it must have physical lubricating and chemical properties suitable for use in hydraulic systems such as, for example:		Mineral oil based hydraulic fluids HL (DIN 51524 part 1). Mineral oil based hydraulic fluids HLP (DIN 51524 part 2). For use of environmentally acceptable fluids (vegetable or polyglycol base) please consult us.
Fluid Temperature	°C (°F)	−20....+80 (−4....+176) [NBR seals]
Permissible degree of fluid contamination		ISO 4572: $\beta_x \geq 75$ X=12...15 ISO 4406: classe 20/18/15 NAS 1638: classe 9
Viscosity range	mm^2/s	20....380 (best 30....46)

Part Number	Description	Max. Quantity	Shipment (Business Days)
R930055595	B8480B2S50000B00Y-KE.EDB-P-LS-B2S5-SAE6	10	10 day(s)
R930053103	B8480E2S50000B000-KE.EDB-P-LSE2S5-SAE6-N	10	10 day(s)

GoTo Focused Delivery Program: Compact Hydraulics

Bankable Directional Valves - Load Sensing - 4/3 - 4/2 Load Sensing Directional Valve Elements - L8_10 (ED1) and L8_11 (ED2-DZ

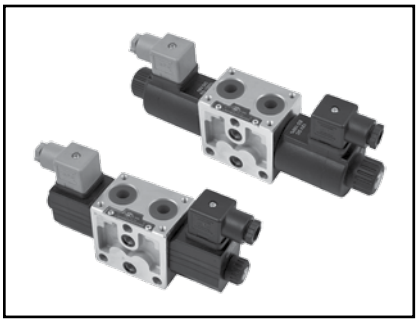

L8_10 and L8_11 directional valve elements with load sensing connections provide load pressure-compensated flow control for the start, stop and direction of oil flow.

For complete engineering and design information: ***GoTo www.boschrexroth-us.com/GoTocompact***

Features

- Valve elements with solenoid operated directional spool
- Control spools operated by screwed-in solenoids with extractable coils
- In the de-energized condition, the control spool is held in the central position by return springs
- Wet pin tubes for DC coils, with push rod for mechanical override; nickel plated surface
- Coils can be rotated 360° around the tube; they can be energized by AC current through special connectors with rectifier (RAC)
- Manual override (push-button or screw type) available upon request
- Plug-in connectors available; EN 175301-803 (was DIN 43650); AMP Junior; DT04-2P (Deutsch), free leads
- Detailed Information: RA18301-01 (L8_10), RA18301-02 (L8_11)

Technical Data

Model		L8_10...	L8_11...
General			
Valve element with 2 solenoids	kg (lbs)	1.55 (3.42)	1.95 (4.3)
Valve element with 1 solenoid	kg (lbs)	1.25 (2.76)	1.45 (3.2)
Valve element with 2 solenoid with lever override	kg (lbs)	1.9 (4.2)	2.2 (4.85)
Valve element with 1 solenoid with lever override	kg (lbs)	1.6 (3.5)	1.7 (3.75)
Hydraulic			
Maximum pressure (P, A, and B ports)	bar (PSI)	310 (4500)	
Maximum dynamic pressure (T)	bar (PSI)	180 (2610)	250 (3625)
Maximum dynamic pressure, with lever override (T)	bar (PSI)	100 (1450)	
Maximum static pressure (T)	bar (PSI)	210 (3045)	310 (4500)
Maximum inlet flow	l/min (GPM)	30 (7.9)	50 (13.2)
Hydraulic fluid General properties: it must have physical lubricating and chemical properties suitable for use in hydraulic systems such as, for example:		Mineral oil based hydraulic fluids HL (DIN 51524 part 1). Mineral oil based hydraulic fluids HLP (DIN 51524 part 2). For use of environmentally acceptable fluids (vegetable or polyglycol base) please consult us.	
Fluid Temperature	°C (°F)	−20....+80 (−4....+176) [NBR seals]	
Permissible degree of fluid contamination		ISO 4572: $\beta_x \geq 75$ X=12...15 ISO 4406: class 20/18/15 NAS 1638: class 9	
Viscosity range	mm^2/s	5....420	

Part Number	Description	Max. Quantity	Shipment (Business Days)
R933003508	L8410A201000030-KE.ED1-LS-Z-SAE8-PT9-A2%	10	10 day(s)
R930055720	L8410A201000030HA-KE.ED1-LS-Z-SAE8-A201	10	10 day(s)
R933003509	L8410B201000030 ED1-LS	10	10 day(s)
R930055701	L8410B201000030HA-KE.ED1-LS-Z-SAE8-B201	10	10 day(s)
R933003600	L8410E201000030	10	10 day(s)
R930055705	L8410E201000030HA-KE.ED1-LS-Z-SAE8-E201	10	10 day(s)
R930055707	L8410Y301000030-KE.ED1-LS-Z-SAE8-Y301-N	10	10 day(s)
R930055687	L8410Y301000030HA-KE.ED1-LS-Z-SAE-Y301-	10	10 day(s)
R933003615	L8411A201000030-KE.ED2-LS-DZ-SAE8-PT9-A%	10	10 day(s)
R930055722	L8411A201000030HA-KE.ED2-LS-DZ-SAE8-A20	10	10 day(s)
R930055699	L8411B201000030HA-KE.ED2-LS-DZ-SAE8-B20	10	10 day(s)
R933008225	L8411E201000030HA-KE.ED2-LS-DZ-SAE8-E20	10	10 day(s)
R930055676	L8411Y301000030-KE.ED2-LS-DZ-SAE8-Y301-N	10	10 day(s)
R930055689	L8411Y301000030HA-KE.ED2-LS-DZ-SAE8-Y30	10	10 day(s)

GoTo Focused Delivery Program: Compact Hydraulics

Bankable Directional Valves - Load Sensing - 4/3 Load Sensing Proportional Valve Elements - L8_80 (ED4-P)

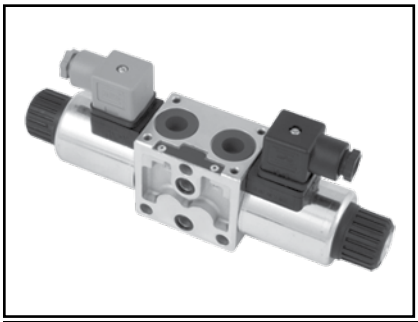

Proportional directional valve elements L8_80 with load sensing connections provide load pressure-compensated flow control for the start, stop, direction, and volume of oil flow.

For complete engineering and design information: ***GoTo www.boschrexroth-us.com/GoTocompact***

Features

- Valve element with direct proportional control of spool
- Control spool operated by screwed-in solenoid with extractable coil
- In the de-energized condition, the control spool is held in the central position by return springs
- Wet pin proportional tubes for DC coils, with push rod for mechanical override; nickel plated surface
- Manual override (push-button or screw type) available upon request
- Plug-in connectors available: EN 175301-803 (Was DIN 43650) and DT04-2P (Deutsch)
- Detailed Information: RA 18301-06

Technical Data

General		
Weight (valve element with 2 solenoids)	kg (lbs)	2.20 (4.85)
Weight (valve element with 1 solenoid)	kg (lbs)	1.70 (3.75)
Ambient Temperature	°C (°F)	–20....+50 (–4....+122) [NBR seals]

Hydraulic		
Maximum pressure (P)	bar (PSI)	310 (4500)
Maximum dynamic pressure (T)	bar (PSI)	210 (3050)
Maximum static pressure (T)	bar (PSI)	250 (3625)
Maximum inlet flow	l/min (GPM)	45 (11.9)
Nominal flow with $\Delta P = 10$ bar	l/min (GPM)	10, 20, 30 (2.64, 5.28, 7.9)
Hydraulic fluid General properties: it must have physical lubricating and chemical properties suitable for use in hydraulic systems such as, for example:		Mineral oil based hydraulic fluids HL (DIN 51524 part 1). Mineral oil based hydraulic fluids HLP (DIN 51524 part 2). For use of environmentally acceptable fluids (vegetable or polyglycol base) please consult us.
Fluid Temperature	°C (°F)	–20....+80 (–4....+176) [NBR seals]
Permissible degree of fluid contamination		ISO 4572: $\beta_x \geq 75$ X=12...15 ISO 4406: class 20/18/15 NAS 1638: class 9
Viscosity range	mm^2/s	20....380 (optimal 30....46)

Part Number	Description	Max. Quantity	Shipment (Business Days)
R930061810	L8481B2S4000030HA-KE.ED4-P1-LS-SAE8-B2S	10	10 day(s)
R930061811	L8481B2S6000030HA-KE.ED4-P1-LS-SAE8-B2S	10	10 day(s)
R930061813	L8481E2I6000030-KE.ED4-P1-LS-SAE8-PT9-E	10	10 day(s)
R930061816	L8481E2S4000030-KE.ED4-P1-LS-SAE8-PT9-E	10	10 day(s)
R930061815	L8481E2S4000030HA-KE.ED4-P1-LS-SAE8-E2S	10	10 day(s)
R930061818	L8481E2S6000030-KE.ED4-P1-LS-SAE8-PT9-E	10	10 day(s)
R930061817	L8481E2S6000030HA-KE.ED4-P1-LS-SAE8-E2S6	10	10 day(s)

GoTo Focused Delivery Program: Compact Hydraulics

Bankable Directional Valves - Load Sensing - 4/3 LS Lever Operated Directional Valve Elements - L8_L1 (ED-LV)

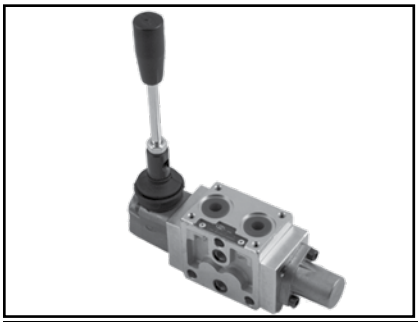

Directional valve elements L8_1... are compact manual operated valves which control the start, the stop and the direction of the oil flow. The hand operated lever moves the control spool from its neutral-central position “0” to the required position “a” or “b”, and the required flow from P to A (with B to T), or P to B (with A to T) is achieved.

For complete engineering and design information: ***GoTo www.boschrexroth-us.com/GoTocompact***

Features

- Valve elements with 4 ways and 3 positions
- Control spools manual operated by hand lever Control spool with return spring or mechanical detent for all three positions
- Detailed Information: RA 18301-10

Technical Data

General		
Weight	kg (lbs)	1.55 (3.42)
Mounting position	kg (lbs)	Unrestricted
Ambient Temperature	°C (°F)	–20....+50 (–4....+122) [NBR seals]

Hydraulic		
Maximum pressure (P)	bar (PSI)	310 (4500)
Maximum static pressure (T)	bar (PSI)	180 (2610)
Maximum inlet flow	l/min (GPM)	60 (15.9)
Nominal flow with $\Delta P = 10$ bar	l/min (GPM)	10, 20, 30 (2.64, 5.28, 7.9)
Hydraulic fluid General properties: it must have physical lubricating and chemical properties suitable for use in hydraulic systems such as, for example:		Mineral oil based hydraulic fluids HL (DIN 51524 part 1). Mineral oil based hydraulic fluids HLP (DIN 51524 part 2). For use of environmentally acceptable fluids (vegetable or polyglycol base) please consult us.
Fluid Temperature	°C (°F)	–20....+80 (–4....+176) [NBR seals]
Permissible degree of fluid contamination		ISO 4572: $\beta_x \geq 75$ X=12...15 ISO 4406: class 20/18/15 NAS 1638: class 9
Viscosity range	mm^2/s	20....380 (optimal 30....46)

Part Number	Description	Max. Quantity	Shipment (Business Days)
R930055716	L84L1A2S8A0M130-EV.ED-LV-LS-SAE8-A2S8-L	10	10 day(s)
R930055717	L84L1B2S4A0M130-EV.ED-LV-LS-SAE8-B2S4-L	10	10 day(s)
R933007585	L84L1B2S8A0M130-EV.ED-LV-LS-SAE8-PT9-B2	10	10 day(s)
R930055718	L84L1E2S4A0M130-EV.ED-LV-LS-SAE8-E2S4-L	10	10 day(s)
R933007882	L84L1E2S8A0M130-EV.ED-LV-LS-SAE8-PT9-E2	10	10 day(s)

GoTo Focused Delivery Program: Compact Hydraulics

Exit Plates

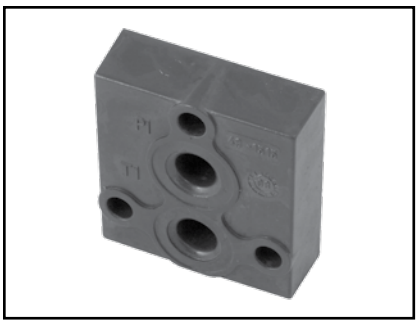

The exit plate TC... is employed as end plates to plug the P and T channels of the ED element of the Directional Valve Assembly, or to provide an extra port for P, T, or P and T.

For complete engineering and design information: ***GoTo www.boschrexroth-us.com/GoTocompact***

Features

- Port sizes are available in SAE 6 and SAE 8
- Detailed Information: RA 18301-60

Technical Data

General		
Weight (w/o ports & SAE 6)	kg (lbs)	0.3 (0.66)
Weight (SAE 8)	kg (lbs)	0.5 (1.10)
Ambient Temperature	°C (°F)	–20....+50 (–4....+120) [NBR seals]

Hydraulic		
Maximum pressure (TC0000)	bar (PSI)	250 (3600)*
Maximum pressure	bar (PSI)	210 (3000)*
Maximum flow	l/min (GPM)	60 (15)
Hydraulic fluid General properties: it must have physical lubricating and chemical properties suitable for use in hydraulic systems such as, for example:		Mineral oil based hydraulic fluids HL (DIN 51524 part 1). Mineral oil based hydraulic fluids HLP (DIN 51524 part 2). For use of environmentally acceptable fluids (vegetable or polyglycol base) please consult us.
Fluid Temperature	°C (°F)	–20....+80 (–4....+176) [NBR seals]
Permissible degree of fluid contamination		ISO 4572: $\beta_x \geq 75$ X=12...15 ISO 4406: classe 20/18/15 NAS 1638: classe 9
Viscosity range	mm^2/s	5....420

*310 bar (4500 PSI) available. Consult factory.

Part Number	Description	Max. Quantity	Shipment (Business Days)
R933003326	TC-00-00-00-AL	3	10 day(s)
R987271813	TC0155	10	10 day(s)
R978046786	TC0177	10	10 day(s)
R987271814	TC0255	10	10 day(s)
R978046787	TC0277	10	10 day(s)
R987271815	TC0355	10	10 day(s)

GoTo Focused Delivery Program: Compact Hydraulics

Intermediate Plates

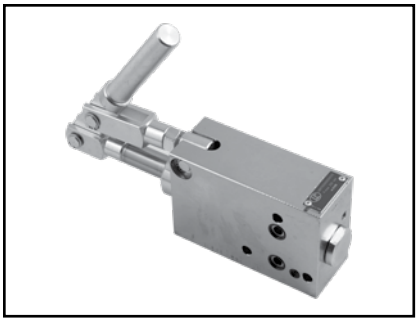

The intermediate plate with an auxiliary hand pump is inserted between the inlet plate and ED modular directional valves. It can be used to regulate the direction of the flow, and to generate pressure without other energy sources.

For complete engineering and design information: ***GoTo www.boschrexroth-us.com/GoTocompact***

Features

- See below for EPM-DE-18:
- Flow is transferred in both push and pull movements
- Detailed Information: RA 18301-30
- See below for TI-M412..:
- These elements consist of body made of Yellow Zinc plated (Cr+3) steel which incorporates the following items:
- check valve on the P -- P1 line
- shuttle valve on the LS lines
- relief valve on the LS line which control max pressure output
- pressure compensated orifice which drains the LS pressure by unloading a small regulated flow to tank
- Detailed information: RA18301-29

Technical Data

General		
Weight (EPM)	kg (lbs)	3.8 (8.4)
Weight (extension lever)	kg (lbs)	0.7 (1.5)
Ambient Temperature	°C (°F)	–20....+50 (–4....+120) [NBR seals]

Hydraulic		
Maximum pressure (resistance)	bar (PSI)	310 (4500)
Maximum pressure (generated)	bar (PSI)	250 (3625)
Opening displacement	cc (in^3)	8.5 (0.51)
Closing displacement	cc (in^3)	9.5 (0.57)
Hydraulic fluid General properties: it must have physical lubricating and chemical properties suitable for use in hydraulic systems such as, for example:		Mineral oil based hydraulic fluids HL (DIN 51524 part 1). Mineral oil based hydraulic fluids HLP (DIN 51524 part 2). For use of environmentally acceptable fluids (vegetable or polyglycol base) please consult us.
Fluid Temperature	°C (°F)	–20....+80 (–4....+176) [NBR]
Permissible degree of fl uid contamination		ISO 4572: $\beta_x \geq 75$ X=12...15 ISO 4406: classe 20/18/15 NAS 1638: classe 9
Viscosity range	mm^2/s	5....420
Maximum internal leakage	cc/min (in^3/min)	0.2 (0.012)

Part Number	Description	Max. Quantity	Shipment (Business Days)
R933003086	TI-M412-00-02-ST	10	10 day(s)

GoTo Focused Delivery Program: Compact Hydraulics

Bankable Accessories

See Technical Data for more information.

For complete engineering and design information: ***GoTo www.boschrexroth-us.com/GoTocompact***

Features

- See Technical Data for more information.

Coil Seal Kit

Material Description	Material No.
SEAL KIT K-1000A (Universal)	R987367243

Bankable Flow Restrictors

Type	Material Description	Material No.	Notes
Bankable flow restrictor, closed orifice	RESTRICTOR D9.0XD0.0XL4.0	R933002936	Use with ED1, ED2, ED-LV, EDC, and EDD valves with A201 spool (series circuit)
Bankable flow restrictor, 0.8mm orifice	RESTRICTOR D9.0XD0.8XL4.0	R933002937	Use with ED1, ED2, ED-LV, EDC, and EDD valves
Bankable flow restrictor, 1.0mm orifice	RESTRICTOR D9.0XD1.0XL4.0	R933007090	Use with ED1, ED2, ED-LV, EDC, and EDD valves

Override Kit

Type	Material Description	Material No.	Notes
Push-button override kit; EP-type, for spool opening	PS.OVR. EP-GM3059/60---------- 271-05098 OVERRIDE KIT, PUSH	R933000042	Use with EDBY bankable directional valves
Push-button override kit; EP-type, for spool opening	PS.OVR. EP-GM5042/43---------- 271-05099 OVERRIDE KIT, PUSH	R933000043	Use with ED2-DZ bankable directional valves
Screw-type manual override kit, 0F-type, for spool opening	TW.OVR.-EF-360-LC04/1-Z---------- LC04ZEF OVERRIDE KIT, SCREW	R933000021	Use with EDC-Z bankable directional valves

Mounting Brackets

Type	Material Description	Material No.	Notes
1 section screw kit, M8	K-2201-KR-SC-M8X80-ED-01E	R933003721	see RA00159/10.11 – RA18301-90/03.11, pg. 2
2 section tie rod kit, M8	K-2202-KR-SC-M8-ED-06-02E	R933003722	see RA00159/10.11 – RA18301-90/03.11, pg. 2
3 section tie rod kit, M8	K-2203-KR-SC-M8-ED-06-03E	R933003723	see RA00159/10.11 – RA18301-90/03.11, pg. 2
4 section tie rod kit, M8	K-2204-KR-SC-M8-ED-06-04E	R933003724	see RA00159/10.11 – RA18301-90/03.11, pg. 2
5 section tie rod kit, M8	K-2205-KR-SC-M8-ED-06-05E	R933003725	see RA00159/10.11 – RA18301-90/03.11, pg. 2
6 section tie rod kit, M8	K-2206-KR-TR-M8X320-ED-06E	R933003726	see RA00159/10.11 – RA18301-90/03.11, pg. 2
7 section tie rod kit, M8	K-2207-KR-TR-M8X365-ED-07E	R933003727	see RA00159/10.11 – RA18301-90/03.11, pg. 2
8 section tie rod kit, M8	K-2208-KR-TR-M8X410-ED-08E	R933003728	see RA00159/10.11 – RA18301-90/03.11, pg. 2
10 section tie rod kit, M8	K-2210-KR-TR-M8X510-ED-10E	R933000000	see RA00159/10.11 – RA18301-90/03.11, pg. 2
Mounting bracket kit, M6	K-2215-KR-FF-M6-ED-06	R933003730	see RA00159/10.11 – RA18301-90/03.11, pg. 3
Mounting bracket kit, PE2-K	K-2216-KR-PIEDE-PE2-K	R933007089	see RA00159/10.11 – RA18301-90/03.11, pg. 3
Mounting bracket kit, TI-M412	K-2217-KR-PIEDE-TI-M412	R933007514	see RA00159/10.11 – RA18301-90/03.11, pg. 3
Single flange bolt kit (60mm), M6	BOLT KIT K-2221A MODULE	R987281101	see RA00159/10.11 – RA18301-90/03.11, pg. 3
Double flange bolt kit (120mm), M6	BOLT KIT K-2222A MODULE	R987281102	see RA00159/10.11 – RA18301-90/03.11, pg. 3

Part Number	Description	Max. Quantity	Shipment (Business Days)
R933002936	0.00----------50-07000 ORIFICE DISK 9.0	10	10 day(s)
R933002937	0.80----------50-07020 ORIFICE DISK 9.0	10	10 day(s)
R933007090	1,00----------50-07021 ORIFICE DISK 9.0	10	10 day(s)
R987281101	BOLT KIT K-2221A MODULE	10	10 day(s)
R987281102	BOLT KIT K-2222A MODULE	10	10 day(s)
R933003721	K-2201-KR-SC-M8X80-ED-01E	10	10 day(s)
R933003722	K-2202-KR-SC-M8-ED-06-02E	10	10 day(s)
R933003723	K-2203-KR-SC-M8-ED-06-03E	10	10 day(s)
R933003724	K-2204-KR-SC-M8-ED-06-04E	10	10 day(s)
R933003725	K-2205-KR-SC-M8-ED-06-05E	10	10 day(s)
R933003726	K-2206-KR-TR-M8X320-ED-06E	10	10 day(s)
R933003727	K-2207-KR-TR-M8X365-ED-07E	10	10 day(s)
R933003728	K-2208-KR-TR-M8X410-ED-08E	10	10 day(s)
R933000000	K-2210-KR-TR-M8X510-ED-10E	10	10 day(s)
R933003730	K-2215-KR-FF-M6-ED-06	10	10 day(s)
R933007089	K-2216-KR-PIEDE-PE2-K	10	10 day(s)
R933007514	K-2217-KR-PIEDE-TI-M412	10	10 day(s)
R933000042	PS.OVR. EP-GM3059/60----------271-05098 OVERRIDE KIT, PUSH	10	10 day(s)
R933000043	PS.OVR. EP-GM5042/43----------271-05099 OVERRIDE KIT, PUSH	10	10 day(s)
R933000021	TW.OVR.-EF-360-LC04/1-Z----------LC04ZEF OVERRIDE KIT, SCREW	10	10 day(s)

GoTo Focused Delivery Program: Compact Hydraulics

Bankable and Diverter Coils

See Technical Data for more information.

For complete engineering and design information: ***GoTo www.boschrexroth-us.com/GoTocompact***

Features

- See Technical Data for more information.

Applicable Valves	Voltage (V)	Connector Type	Material Description	Material No.
EDB-Y bankable valves	12 VDC	DIN plug	C31, 271-0450 EDB-Y, 12 DC, DIN	R933002776
EDB-Y bankable valves	24 VDC	DIN plug	C31, 271-0451 EDB-Y, 24 DC, DIN	R933002777
EDB-Y bankable valves	12 VDC	DEUTSCH DT 04-2P	C31, 271-0452 EDB-Y, 12 DC, DT	R933002778
EDB-Y bankable valves	24 VDC	DEUTSCH DT 04-2P	C31, 271-0453 EDB-Y, 24 DC, DT	R933002779
EDB-Z bankable valves	12 VDC	DIN plug	C36, 271-0510 EDB-Z, ED1, EDC-Z, 12 DC, DIN	R933000044
EDB-Z / ED1 / EDC bankable valves	12 VDC	---	C36, 271-0510002 EDB-Z, ED1, EDC-Z, 12 DC, CABLES	R933000045
EDB-Z / ED1 / EDC bankable valves	12 VDC	DEUTSCH DT 04-2P	C36, 271-0510207 EDB-Z, ED1, EDC-Z, 12 DC, DT	R933000048
EDB-Z / ED1 / EDC bankable valves	24 VDC	DIN plug	C36, 271-0511 EDB-Z, ED1, EDC-Z, 24 DC, DIN	R933000053
EDB-Z / ED1 / EDC bankable valves	24 VDC	---	C36, 271-0511002 EDB-Z, ED1, EDC-Z, 24 DC, CABLES	R933000055
EDB-Z / ED1 / EDC bankable valves	24 VDC	DEUTSCH DT 04-2P	C36, 271-0511207 EDB-Z, ED1, EDC-Z, 24 DC, DT	R933000058
ED2 bankable valves	12 VDC	DIN plug	C45, 271-0417 ED2, 12 DC, DIN	R933000026
ED2 bankable valves	12 VDC	DEUTSCH DT 04-2P	C45, 271-041717 ED2, 12 DC, DT	R933000030
ED2 bankable valves	24 VDC	DEUTSCH DT 04-2P	C45, 271-041719 ED2, 24 DC, DT	R933000032
ED2 bankable valves	24 VDC	DIN plug	C45, 271-0418 ED2, 24 DC, DIN	R933000034
EDD bankable valves, and VS245 diverter valves	12 VDC	DIN plug	C48, 271-0520 ED2, 12 DC, DIN	R933000063
ED2 bankable valves	12 VDC	---	C48, 271-052000 ED2, 12 DC, CABLES	R933000064
EDD bankable valves, and VS245 diverter valves	12 VDC	DEUTSCH DT 04-2P	C48, 271-052004 ED2, 12 DC, DT	R933000068
ED2 bankable valves	24 VDC	---	C48, 271-052005 ED2, 24 DC, CABLES	R933000070

Applicable Valves	Voltage (V)	Connector Type	Material Description	Material No.
EDD bankable valves, and VS245 diverter valves	24 VDC	DEUTSCH DT 04-2P	C48, 271-052009 ED2, 24 DC, DT	R933000075
EDD bankable valves, and VS245 diverter valves	24 VDC	DIN plug	C48, 271-0521 ED2, 24 DC, DIN	R933000076
VS95 and VS285 diverter valves	12 VDC	DIN plug	C65-01-OB-12DC-44W-H-D25.7-281-0617	R933000100
VS95 and VS285 diverter valves	12 VDC	DEUTSCH DT 04-2P	C65-07-OB-12DC-44W-D25.7-281-06194	R933000107
EDC-P bankable valves	12 VDC	DIN plug	D15, 271-8020210 ED4, ED4-PT, EDC-P, 12 DC, DIN	R933000092
EDC-P bankable valves	24 VDC	DIN plug	D15, 271-8020220 ED4, ED4-PT, EDC-P, 24 DC, DIN	R933000093
EDC-P bankable valves	12 VDC	DEUTSCH DT 04-2P	D15, 271-8020230 ED4, ED4-PT, EDC-P, 12 DC, DT	R933000094
EDC-P bankable valves	24 VDC	DEUTSCH DT 04-2P	D15, 271-8020240 ED4, ED4-PT, EDC-P, 24 DC, DT	R933002798
EDB-P bankable valves	12 VDC	DIN plug	P45-01-OB-12DC-17W-H-D19--- COIL, EDB-P, 12 DC, DIN	R933000088
EDB-P bankable valves	24 VDC	EN 175301-803	P45-01-OC-24DC-17W-H-D19-271-8010450	R933000090

Part Number	Description	Max. Quantity	Shipment (Business Days)
R933000055	C36, 271-0511002 EDB-Z, ED1, EDC-Z, 24 DC, CABLES	10	10 day(s)
R933000026	C45, 271-0417 ED2, 12 DC, DIN	10	10 day(s)
R933000030	C45, 271-041717 ED2, 12 DC, DT	10	10 day(s)
R933000032	C45, 271-041719 ED2, 24 DC, DT	10	10 day(s)
R933000034	C45, 271-0418 ED2, 24 DC, DIN	10	10 day(s)
R933000063	C48, 271-0520 ED2, 12 DC, DIN	10	10 day(s)
R933000064	C48, 271-052000 ED2, 12 DC, CABLES	10	10 day(s)
R933000068	C48, 271-052004 ED2, 12 DC, DT	10	10 day(s)
R933000070	C48, 271-052005 ED2, 24 DC, CABLES	10	10 day(s)
R933000075	C48, 271-052009 ED2, 24 DC, DT	10	10 day(s)
R933000076	C48, 271-0521 ED2, 24 DC, DIN	10	10 day(s)
R933000100	C65-01-OB-12DC-44W-H-D25.7-281-0617	10	10 day(s)
R933000107	C65-07-OB-12DC-44W-D25.7-281-06194	10	10 day(s)
R933000092	D15, 271-8020210 ED4, ED4-PT, EDC-P, 12 DC, DIN	10	10 day(s)
R933000093	D15, 271-8020220 ED4, ED4-PT, EDC-P, 24 DC, DIN	10	10 day(s)
R933000094	D15, 271-8020230 ED4, ED4-PT, EDC-P, 12 DC, DT	10	10 day(s)
R933002798	D15, 271-8020240 ED4, ED4-PT, EDC-P, 24 DC, DT	10	10 day(s)
R933000088	P45-01-OB-12DC-17W-H-D19-----271-8010400 COIL, EDB-P, 12 DC, DIN	10	10 day(s)
R933000090	P45-01-OC-24DC-17W-H-D19-271-8010450	10	10 day(s)

GoTo Focused Delivery Program: Power Packs / Motor Pumps

Power Packs, fixed displacement - PP

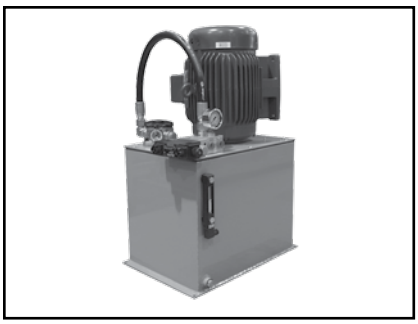

PP Standard Power Packs utilize external gear pumps with standard industrial keyed shaft. Motors can be run at 60Hz/1750RPM/208-230/460V or 50Hz/1425RPM/190-20/380-416V. Motors are NEMA with female shaft.

For complete engineering and design information: ***GoTo www.boschrexroth-us.com/gotopowerpacks***

Features

- Powder coated steel reservoir
- System relief valve & gauge
- One station D03 aluminum bar manifold
- PP5 - 10µ absolute, PP10, 20 - 16µ absolute - in-tank return filter/filler/breather
- Check valve in pressure line
- Spare in-tank return down-line
- Detailed information: RA09788

Technical Data

Model Code	Reservoir Size G (l)	Pump Flow GPM (lpm)*	Max. Pressure PSI (bar)**	Motor HP (kw)
PP5/G2004/2/3BM1/H0/L0	5 (18.9)	1.9 (7.2)	1534 (106)	2.0 (1.5)
PP5/G2004/3/3BM1/H0/L0	5 (18.9)	1.9 (7.2)	2300 (159)	3.0 (2.2)
PP5/G2004/5/3BM1/H0/L0	5 (18.9)	1.9 (7.2)	3625 (250)†	5.0 (3.7)
PP5/G2005/2/3BM1/H0/L0	5 (18.9)	2.6 (9.8)	1121 (77)	2.0 (1.5)
PP5/G2005/3/3BM1/H0/L0	5 (18.9)	2.6 (9.8)	1681 (116)	3.0 (2.2)
PP5/G2005/5/3BM1/H0/L0	5 (18.9)	2.6 (9.8)	2802 (193)	5.0 (3.7)
PP10/G2005/2/3BM1/H0/L0	10 (37.9)	2.6 (9.8)	1121 (77)	2.0 (1.5)
PP10/G2005/3/3BM1/H0/L0	10 (37.9)	2.6 (9.8)	1681 (116)	3.0 (2.2)
PP10/G2005/5/3BM1/H0/L0	10 (37.9)	2.6 (9.8)	2802 (193)	5.0 (3.7)
PP10/G2008/2/3BM1/H0/L0	10 (37.9)	3.8 (14.4)	767 (53)	2.0 (1.5)
PP10/G2008/3/3BM1/H0/L0	10 (37.9)	3.8 (14.4)	1150 (79)	3.0 (2.2)
PP10/G2008/5/3BM1/H0/L0	10 (37.9)	3.8 (14.4)	1917 (132)	5.0 (3.7)
PP10/G2008/7.5/3BM1/H0/L0	10 (37.9)	3.8 (14.4)	2875 (198)	7.5 (5.6)
PP20/G2011/3/3BM1/H0/L0	20 (75.7)	5.2 (19.7)	841 (58)	3.0 (2.2)
PP20/G2011/5/3BM1/H0/L0	20 (75.7)	5.2 (19.7)	1401 (97)	5.0 (3.7)
PP20/G2011/7.5/3BM1/H0/L0	20 (75.7)	5.2 (19.7)	2101 (145)	7.5 (5.6)
PP20/G2011/10/3BM1/H0/L0	20 (75.7)	5.2 (19.7)	2802 (193)	10.0 (7.5)
PP20/G2016/5/3BM1/H0/L0	20 (75.7)	7.6 (28.8)	958 (66)	5.0 (3.7)
PP20/G2016/7.5/3BM1/H0/L0	20 (75.7)	7.6 (28.8)	1438 (99)	7.5 (5.6)
PP20/G2016/10/3BM1/H0/L0	20 (75.7)	7.6 (28.8)	1917 (132)	10.0 (7.5)

* Based on 1750 RPM, and 100% volumetric efficiency; actual flow will be lower.

** All max pressures reflect an 85% overall efficiency (1.15 SF not included in calculation).

† Limited by maximum continuous pressure of pump.

Part Number	Description	Max. Quantity	Shipment (Business Days)
R978931255	PP10/G2005/2/3BM1/H3/L0	3	10 day(s)
R978931256	PP10/G2005/2/3BM2/H0/L0	3	10 day(s)
R978931258	PP10/G2005/2/3BM2/H3/L0	3	10 day(s)
R978931259	PP10/G2005/2/3BM3/H0/L0	3	10 day(s)
R978931261	PP10/G2005/2/3BM3/H3/L0	3	10 day(s)
R978931262	PP10/G2005/2/3BM4/H0/L0	3	10 day(s)
R978931264	PP10/G2005/2/3BM4/H3/L0	3	10 day(s)
R978931265	PP10/G2005/2/3BM5/H0/L0	3	10 day(s)
R978931267	PP10/G2005/2/3BM5/H3/L0	3	10 day(s)
R978931253	PP10/G2005/2BM1	3	10 day(s)
R978931279	PP10/G2005/3/3BM1/H3/L0	3	10 day(s)
R978931280	PP10/G2005/3/3BM2/H0/L0	3	10 day(s)
R978931282	PP10/G2005/3/3BM2/H3/L0	3	10 day(s)
R978931283	PP10/G2005/3/3BM3/H0/L0	3	10 day(s)
R978931285	PP10/G2005/3/3BM3/H3/L0	3	10 day(s)
R978931286	PP10/G2005/3/3BM4/H0/L0	3	10 day(s)
R978931288	PP10/G2005/3/3BM4/H3/L0	3	10 day(s)
R978931289	PP10/G2005/3/3BM5/H0/L0	3	10 day(s)
R978931290	PP10/G2005/3/3BM5/H3/L0	3	10 day(s)
R978931277	PP10/G2005/3BM1	3	10 day(s)
R978931299	PP10/G2005/5/3BM1/H3/L0	3	10 day(s)
R978931300	PP10/G2005/5/3BM2/H0/L0	3	10 day(s)
R978931302	PP10/G2005/5/3BM2/H3/L0	3	10 day(s)
R978931303	PP10/G2005/5/3BM3/H0/L0	3	10 day(s)
R978931305	PP10/G2005/5/3BM3/H3/L0	3	10 day(s)
R978931306	PP10/G2005/5/3BM4/H0/L0	3	10 day(s)
R978931308	PP10/G2005/5/3BM4/H3/L0	3	10 day(s)
R978931309	PP10/G2005/5/3BM5/H0/L0	3	10 day(s)
R978931311	PP10/G2005/5/3BM5/H3/L0	3	10 day(s)
R978931297	PP10/G2005/5BM1	3	10 day(s)
R978931428	PP10/G2008/2/3BM1/H3/L0	3	10 day(s)
R978931429	PP10/G2008/2/3BM2/H0/L0	3	10 day(s)
R978931431	PP10/G2008/2/3BM2/H3/L0	3	10 day(s)
R978931432	PP10/G2008/2/3BM3/H0/L0	3	10 day(s)
R978931434	PP10/G2008/2/3BM3/H3/L0	3	10 day(s)
R978931435	PP10/G2008/2/3BM4/H0/L0	3	10 day(s)
R978931437	PP10/G2008/2/3BM4/H3/L0	3	10 day(s)
R978931438	PP10/G2008/2/3BM5/H0/L0	3	10 day(s)
R978931440	PP10/G2008/2/3BM5/H3/L0	3	10 day(s)
R978931426	PP10/G2008/2BM1	3	10 day(s)
R978931452	PP10/G2008/3/3BM1/H3/L0	3	10 day(s)
R978931453	PP10/G2008/3/3BM2/H0/L0	3	10 day(s)
R978931455	PP10/G2008/3/3BM2/H3/L0	3	10 day(s)
R978931456	PP10/G2008/3/3BM3/H0/L0	3	10 day(s)
R978931457	PP10/G2008/3/3BM3/H3/L0	3	10 day(s)
R978931458	PP10/G2008/3/3BM4/H0/L0	3	10 day(s)
R978931460	PP10/G2008/3/3BM4/H3/L0	3	10 day(s)
R978931461	PP10/G2008/3/3BM5/H0/L0	3	10 day(s)
R978931450	PP10/G2008/3BM1	3	10 day(s)
R978931472	PP10/G2008/5/3BM1/H3/L0	3	10 day(s)
R978931473	PP10/G2008/5/3BM2/H0/L0	3	10 day(s)
R978931475	PP10/G2008/5/3BM2/H3/L0	3	10 day(s)

R978931476	PP10/G2008/5/3BM3/H0/L0	3	10 day(s)
R978931477	PP10/G2008/5/3BM3/H3/L0	3	10 day(s)
R978931478	PP10/G2008/5/3BM4/H0/L0	3	10 day(s)
R978931480	PP10/G2008/5/3BM4/H3/L0	3	10 day(s)
R978931481	PP10/G2008/5/3BM5/H0/L0	3	10 day(s)
R978931483	PP10/G2008/5/3BM5/H3/L0	3	10 day(s)
R978931470	PP10/G2008/5BM1	3	10 day(s)
R978931492	PP10/G2008/7.5/3BM1/H3/L0	3	10 day(s)
R978931493	PP10/G2008/7.5/3BM2/H0/L0	3	10 day(s)
R978931495	PP10/G2008/7.5/3BM2/H3/L0	3	10 day(s)
R978931496	PP10/G2008/7.5/3BM3/H0/L0	3	10 day(s)
R978931498	PP10/G2008/7.5/3BM3/H3/L0	3	10 day(s)
R978931499	PP10/G2008/7.5/3BM4/H0/L0	3	10 day(s)
R978931501	PP10/G2008/7.5/3BM4/H3/L0	3	10 day(s)
R978931502	PP10/G2008/7.5/3BM5/H0/L0	3	10 day(s)
R978931490	PP10/G2008/7.5BM1	3	10 day(s)
R978932368	PP20/G2011/10/3BM1/H3/L0	3	10 day(s)
R978932369	PP20/G2011/10/3BM2/H0/L0	3	10 day(s)
R978932371	PP20/G2011/10/3BM2/H3/L0	3	10 day(s)
R978932372	PP20/G2011/10/3BM3/H0/L0	3	10 day(s)
R978932374	PP20/G2011/10/3BM3/H3/L0	3	10 day(s)
R978932375	PP20/G2011/10/3BM4/H0/L0	3	10 day(s)
R978932377	PP20/G2011/10/3BM4/H3/L0	3	10 day(s)
R978932378	PP20/G2011/10/3BM5/H0/L0	3	10 day(s)
R978932380	PP20/G2011/10/3BM5/H3/L0	3	10 day(s)
R978932366	PP20/G2011/10BM1	3	10 day(s)
R978932410	PP20/G2011/3/3BM1/H3/L0	3	10 day(s)
R978932411	PP20/G2011/3/3BM2/H0/L0	3	10 day(s)
R978932413	PP20/G2011/3/3BM2/H3/L0	3	10 day(s)
R978932414	PP20/G2011/3/3BM3/H0/L0	3	10 day(s)
R978932416	PP20/G2011/3/3BM3/H3/L0	3	10 day(s)
R978932417	PP20/G2011/3/3BM4/H0/L0	3	10 day(s)
R978932419	PP20/G2011/3/3BM4/H3/L0	3	10 day(s)
R978932420	PP20/G2011/3/3BM5/H0/L0	3	10 day(s)
R978932422	PP20/G2011/3/3BM5/H3/L0	3	10 day(s)
R978932408	PP20/G2011/3BM1	3	10 day(s)
R978932431	PP20/G2011/5/3BM1/H3/L0	3	10 day(s)
R978932432	PP20/G2011/5/3BM2/H0/L0	3	10 day(s)
R978932434	PP20/G2011/5/3BM2/H3/L0	3	10 day(s)
R978932435	PP20/G2011/5/3BM3/H0/L0	3	10 day(s)
R978932437	PP20/G2011/5/3BM3/H3/L0	3	10 day(s)
R978932438	PP20/G2011/5/3BM4/H0/L0	3	10 day(s)
R978932440	PP20/G2011/5/3BM4/H3/L0	3	10 day(s)
R978932441	PP20/G2011/5/3BM5/H0/L0	3	10 day(s)
R978932443	PP20/G2011/5/3BM5/H3/L0	3	10 day(s)
R978932429	PP20/G2011/5BM1	3	10 day(s)
R978932453	PP20/G2011/7.5/3BM1/H3/L0	3	10 day(s)
R978932454	PP20/G2011/7.5/3BM2/H0/L0	3	10 day(s)
R978932456	PP20/G2011/7.5/3BM2/H3/L0	3	10 day(s)
R978932457	PP20/G2011/7.5/3BM3/H0/L0	3	10 day(s)
R978932459	PP20/G2011/7.5/3BM3/H3/L0	3	10 day(s)
R978932460	PP20/G2011/7.5/3BM4/H0/L0	3	10 day(s)
R978932462	PP20/G2011/7.5/3BM4/H3/L0	3	10 day(s)
R978932463	PP20/G2011/7.5/3BM5/H0/L0	3	10 day(s)
R978932465	PP20/G2011/7.5/3BM5/H3/L0	3	10 day(s)

R978932451	PP20/G2011/7.5BM1	3	10 day(s)
R978932510	PP20/G2016/10/3BM1/H3/L0	3	10 day(s)
R978932511	PP20/G2016/10/3BM2/H0/L0	3	10 day(s)
R978932513	PP20/G2016/10/3BM2/H3/L0	3	10 day(s)
R978932514	PP20/G2016/10/3BM3/H0/L0	3	10 day(s)
R978932516	PP20/G2016/10/3BM3/H3/L0	3	10 day(s)
R978932517	PP20/G2016/10/3BM4/H0/L0	3	10 day(s)
R978932519	PP20/G2016/10/3BM4/H3/L0	3	10 day(s)
R978932520	PP20/G2016/10/3BM5/H0/L0	3	10 day(s)
R978932522	PP20/G2016/10/3BM5/H3/L0	3	10 day(s)
R978932508	PP20/G2016/10BM1	3	10 day(s)
R978932616	PP20/G2016/5/3BM1/H3/L0	3	10 day(s)
R978932617	PP20/G2016/5/3BM2/H0/L0	3	10 day(s)
R978932619	PP20/G2016/5/3BM2/H3/L0	3	10 day(s)
R978932620	PP20/G2016/5/3BM3/H0/L0	3	10 day(s)
R978932622	PP20/G2016/5/3BM3/H3/L0	3	10 day(s)
R978932623	PP20/G2016/5/3BM4/H0/L0	3	10 day(s)
R978932625	PP20/G2016/5/3BM4/H3/L0	3	10 day(s)
R978932626	PP20/G2016/5/3BM5/H0/L0	3	10 day(s)
R978932628	PP20/G2016/5/3BM5/H3/L0	3	10 day(s)
R978932614	PP20/G2016/5BM1	3	10 day(s)
R978932637	PP20/G2016/7.5/3BM1/H3/L0	3	10 day(s)
R978932638	PP20/G2016/7.5/3BM2/H0/L0	3	10 day(s)
R978932640	PP20/G2016/7.5/3BM2/H3/L0	3	10 day(s)
R978932641	PP20/G2016/7.5/3BM3/H0/L0	3	10 day(s)
R978932643	PP20/G2016/7.5/3BM3/H3/L0	3	10 day(s)
R978932644	PP20/G2016/7.5/3BM4/H0/L0	3	10 day(s)
R978932646	PP20/G2016/7.5/3BM4/H3/L0	3	10 day(s)
R978932647	PP20/G2016/7.5/3BM5/H0/L0	3	10 day(s)
R978932649	PP20/G2016/7.5/3BM5/H3/L0	3	10 day(s)
R978932635	PP20/G2016/7.5BM1	3	10 day(s)
R978932912	PP5/G2004/2/3BM1/H2/L0	3	10 day(s)
R978932913	PP5/G2004/2/3BM2/H0/L0	3	10 day(s)
R978932915	PP5/G2004/2/3BM2/H2/L0	3	10 day(s)
R978932916	PP5/G2004/2/3BM3/H0/L0	3	10 day(s)
R978932918	PP5/G2004/2/3BM3/H2/L0	3	10 day(s)
R978932919	PP5/G2004/2/3BM4/H0/L0	3	10 day(s)
R978932921	PP5/G2004/2/3BM4/H2/L0	3	10 day(s)
R978932922	PP5/G2004/2/3BM5/H0/L0	3	10 day(s)
R978932924	PP5/G2004/2/3BM5/H2/L0	3	10 day(s)
R978932910	PP5/G2004/2BM1	3	10 day(s)
R978932934	PP5/G2004/3/3BM1/H2/L0	3	10 day(s)
R978932935	PP5/G2004/3/3BM2/H0/L0	3	10 day(s)
R978932937	PP5/G2004/3/3BM2/H2/L0	3	10 day(s)
R978932938	PP5/G2004/3/3BM3/H0/L0	3	10 day(s)
R978932940	PP5/G2004/3/3BM3/H2/L0	3	10 day(s)
R978932941	PP5/G2004/3/3BM4/H0/L0	3	10 day(s)
R978932943	PP5/G2004/3/3BM4/H2/L0	3	10 day(s)
R978932944	PP5/G2004/3/3BM5/H0/L0	3	10 day(s)
R978932946	PP5/G2004/3/3BM5/H2/L0	3	10 day(s)
R978932932	PP5/G2004/3BM1	3	10 day(s)
R978932954	PP5/G2004/5/3BM1/H2/L0	3	10 day(s)
R978932955	PP5/G2004/5/3BM2/H0/L0	3	10 day(s)
R978932957	PP5/G2004/5/3BM2/H2/L0	3	10 day(s)

R978932958	PP5/G2004/5/3BM3/H0/L0	3	10 day(s)
R978932960	PP5/G2004/5/3BM3/H2/L0	3	10 day(s)
R978932961	PP5/G2004/5/3BM4/H0/L0	3	10 day(s)
R978932963	PP5/G2004/5/3BM4/H2/L0	3	10 day(s)
R978932964	PP5/G2004/5/3BM5/H0/L0	3	10 day(s)
R978932966	PP5/G2004/5/3BM5/H2/L0	3	10 day(s)
R978932952	PP5/G2004/5BM1	3	10 day(s)
R978933042	PP5/G2005/2/3BM1/H2/L0	3	10 day(s)
R978933043	PP5/G2005/2/3BM2/H0/L0	3	10 day(s)
R978933045	PP5/G2005/2/3BM2/H2/L0	3	10 day(s)
R978933046	PP5/G2005/2/3BM3/H0/L0	3	10 day(s)
R978933048	PP5/G2005/2/3BM3/H2/L0	3	10 day(s)
R978933049	PP5/G2005/2/3BM4/H0/L0	3	10 day(s)
R978933051	PP5/G2005/2/3BM4/H2/L0	3	10 day(s)
R978933052	PP5/G2005/2/3BM5/H0/L0	3	10 day(s)
R978933054	PP5/G2005/2/3BM5/H2/L0	3	10 day(s)
R978933040	PP5/G2005/2BM1	3	10 day(s)
R978933064	PP5/G2005/3/3BM1/H2/L0	3	10 day(s)
R978933065	PP5/G2005/3/3BM2/H0/L0	3	10 day(s)
R978933067	PP5/G2005/3/3BM2/H2/L0	3	10 day(s)
R978933068	PP5/G2005/3/3BM3/H0/L0	3	10 day(s)
R978933070	PP5/G2005/3/3BM3/H2/L0	3	10 day(s)
R978933071	PP5/G2005/3/3BM4/H0/L0	3	10 day(s)
R978933073	PP5/G2005/3/3BM4/H2/L0	3	10 day(s)
R978933074	PP5/G2005/3/3BM5/H0/L0	3	10 day(s)
R978933076	PP5/G2005/3/3BM5/H2/L0	3	10 day(s)
R978933062	PP5/G2005/3BM1	3	10 day(s)
R978933085	PP5/G2005/5/3BM1/H2/L0	3	10 day(s)
R978933086	PP5/G2005/5/3BM2/H0/L0	3	10 day(s)
R978933088	PP5/G2005/5/3BM2/H2/L0	3	10 day(s)
R978933089	PP5/G2005/5/3BM3/H0/L0	3	10 day(s)
R978933091	PP5/G2005/5/3BM3/H2/L0	3	10 day(s)
R978933092	PP5/G2005/5/3BM4/H0/L0	3	10 day(s)
R978933094	PP5/G2005/5/3BM4/H2/L0	3	10 day(s)
R978933095	PP5/G2005/5/3BM5/H0/L0	3	10 day(s)
R978933097	PP5/G2005/5/3BM5/H2/L0	3	10 day(s)
R978933083	PP5/G2005/5BM1	3	10 day(s)

GoTo Focused Delivery Program: Power Packs / Motor Pumps

Close-coupled motor pump groups - MPGB-AZP

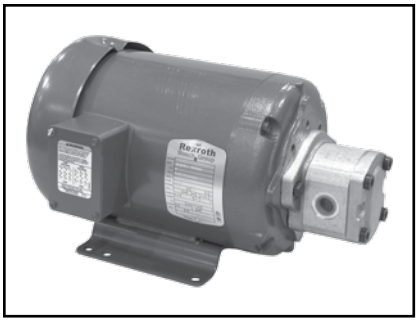

MPGB-AZP close-coupled motor pump groups are fixed displacement and come fully assembled from our factory. Pumps are external gear type, standard industrial keyed shaft. Motors are NEMA frame, femal shaft, and can be run at 60 Hz/1750 RPM/208-230/460 V or 50 Hz/1425 RPM/ 190-208/380-416 V.

For complete engineering and design information: ***GoTo www.boschrexroth-us.com/gotopowerpacks***

Features

- Eliminate the need for multiple vendors by giving you one source of supply
- Closed-coupled feature dramatically reduces the overall length of the motor pump group
- Motor pump groups can be mounted horizontally or vertically
- Detailed information: RA12750

Technical Data

Model Code	Pump Size in^3/rev (cc/rev)	Pump Flow GPM (l/min)*	Max. Pressure PSI (bar)**	Motor		Connection sizes
				HP (kW)	Frame	
MPGB002HTYZ4DEOFS1HAZPF12004K1NN	0.24 (4.0)	1.9 (7.2)	1534 (106)	2.0 (1.5)	145TYZ	Suction = SAE-10 Pressure = SAE-8
MPGB003HTYZ4DEOFS1HAZPF12004K1NN	0.24 (4.0)	1.9 (7.2)	2300 (159)	3.0 (2.2)	145TYZ	
MPGB005HTYZ4DEOFS1HAZPF12004K1NN	0.24 (4.0)	1.9 (7.2)	3625 (250)†	5.0 (3.7)	184TYZ	
MPGB002HTYZ4DEOFS1HAZPF12005K1NN	0.34 (5.5)	2.6 (9.8)	1121 (77)	2.0 (1.5)	145TYZ	Suction = SAE-10 Pressure = SAE-8
MPGB003HTYZ4DEOFS1HAZPF12005K1NN	0.34 (5.5)	2.6 (9.8)	1681 (116)	3.0 (2.2)	145TYZ	
MPGB005HTYZ4DEOFS1HAZPF12005K1NN	0.34 (5.5)	2.6 (9.8)	2802 (193)	5.0 (3.7)	184TYZ	
MPGB002HTYZ4DEOFS1HAZPF12008K1NN	0.49 (8.0)	3.8 (14.4)	767 (53)	2.0 (1.5)	145TYZ	Suction = SAE-12 Pressure = SAE-10
MPGB003HTYZ4DEOFS1HAZPF12008K1NN	0.49 (8.0)	3.8 (14.4)	1150 (79)	3.0 (2.2)	145TYZ	
MPGB005HTYZ4DEOFS1HAZPF12008K1NN	0.49 (8.0)	3.8 (14.4)	1917 (132)	5.0 (3.7)	184TYZ	
MPGB7.5HTYZ4DEOFS1HAZPF12008K1NN	0.49 (8.0)	3.8 (14.4)	2875 (198)	7.5 (5.6)	213TYZ	
MPGB003HTYZ4DEOFS1HAZPF12011K1NN	0.67 (11.0)	5.2 (19.7)	841 (58)	3.0 (2.2)	145TYZ	Suction = SAE-12 Pressure = SAE-10
MPGB005HTYZ4DEOFS1HAZPF12011K1NN	0.67 (11.0)	5.2 (19.7)	1401 (97)	5.0 (3.7)	184TYZ	
MPGB7.5HTYZ4DEOFS1HAZPF12011K1NN	0.67 (11.0)	5.2 (19.7)	2101 (145)	7.5 (5.6)	213TYZ	
MPGB010HTYZ4DEOFS1HAZPF12011K1NN	0.67 (11.0)	5.2 (19.7)	2802 (193)	10.0 (7.5)	215TYZ	
MPGB005HTYZ4DEOFS1HAZPF12016K1NN	0.98 (16.0)	7.6 (28.8)	958 (66)	5.0 (3.7)	184TYZ	Suction = SAE-16 Pressure = SAE-10
MPGB7.5HTYZ4DEOFS1HAZPF12016K1NN	0.98 (16.0)	7.6 (28.8)	1438 (99)	7.5 (5.6)	213TYZ	
MPGB010HTYZ4DEOFS1HAZPF12016K1NN	0.98 (16.0)	7.6 (28.8)	1917 (132)	10.0 (7.5)	215TYZ	

* Based on 1750 RPM, and 100% volumetric efficiency; actual flow will be lower.

** All max pressures reflect an 85% overall efficiency (1.15 SF not included in calculation).

† Limited by maximum continuous pressure of pump.

Part Number	Description	Max. Quantity	Shipment (Business Days)
R978020520	MPGB002HTYZ4DEOFS1HAZPF12004K1NN	3	10 day(s)
R978020524	MPGB002HTYZ4DEOFS1HAZPF12005K1NN	3	10 day(s)
R978020530	MPGB002HTYZ4DEOFS1HAZPF12008K1NN	3	10 day(s)
R978020521	MPGB003HTYZ4DEOFS1HAZPF12004K1NN	3	10 day(s)
R978020525	MPGB003HTYZ4DEOFS1HAZPF12005K1NN	3	10 day(s)
R978020531	MPGB003HTYZ4DEOFS1HAZPF12008K1NN	3	10 day(s)
R978020537	MPGB003HTYZ4DEOFS1HAZPF12011K1NN	3	10 day(s)
R978020522	MPGB005HTYZ4DEOFS1HAZPF12004K1NN	3	10 day(s)
R978020526	MPGB005HTYZ4DEOFS1HAZPF12005K1NN	3	10 day(s)
R978020532	MPGB005HTYZ4DEOFS1HAZPF12008K1NN	3	10 day(s)
R978020538	MPGB005HTYZ4DEOFS1HAZPF12011K1NN	3	10 day(s)
R978020542	MPGB005HTYZ4DEOFS1HAZPF12016K1NN	3	10 day(s)
R978020732	MPGB010HTYZ4DEOFS1HAZPF12011K1NN	3	10 day(s)
R978020544	MPGB010HTYZ4DEOFS1HAZPF12016K1NN	3	10 day(s)
R978020533	MPGB7.5HTYZ4DEOFS1HAZPF12008K1NN	3	10 day(s)
R978020731	MPGB7.5HTYZ4DEOFS1HAZPF12011K1NN	3	10 day(s)
R978020543	MPGB7.5HTYZ4DEOFS1HAZPF12016K1NN	3	10 day(s)

GoTo Focused Delivery Program: Power Packs / Motor Pumps

Preassembled filter/cooler module - MFC3

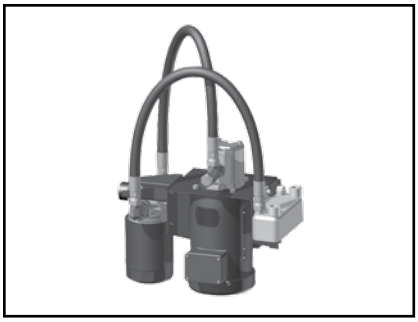

The MFC3 is a compact off-line filtration/ cooling package, which provides numerous mounting and configuration options. The design allows for multiple selections of AC motors, pumps, filter elements, and auxiliary components. The modular design concept permits field upgrades concerning oil flow, filtration, or configuration with minimal labor and cost.

For complete engineering and design information: ***GoTo www.boschrexroth-us.com/gotopowerpacks***

Features

- Off line does not interrupt production
- Versatile / Simple Modular design concept
- Space saving vertical designs
- Durable common base construction
- Multiple mounting and configurations
- Multiple pump, and filter element selections
- Dual frequency motor windings standard
- Stainless Steel, plate style heat exchangers
- Single supply source
- Extensive international distribution and service
- Detailed information: RA50127

Technical Data

See data sheet RA50127 for detailed Technical Data. All part numbers listed in RA50127 are included in ***GoTo***.

Part Number	Description	Max. Quantity	Shipment (Business Days)
R978026410	MFC3HLB1.0H4/DEOFAF/011030S/09003AJ	3	5 day(s)
R978026411	MFC3HLB1.0H4/DEOFAF/011030S/09003JJ	3	5 day(s)
R978052055	MFC3HLB1.0H4/DEOFAF/011030S/09010AJ	3	10 day(s)
R978052056	MFC3HLB1.0H4/DEOFAF/011030S/09010JJ	3	10 day(s)
R978026412	MFC3HLB1.0H4/DEOFAF/016030S/09003AJ	3	5 day(s)
R978026413	MFC3HLB1.0H4/DEOFAF/016030S/09003JJ	3	5 day(s)
R978052057	MFC3HLB1.0H4/DEOFAF/016030S/09010AJ	3	10 day(s)
R978052058	MFC3HLB1.0H4/DEOFAF/016030S/09010JJ	3	10 day(s)
R978026418	MFC3HLB2.0H4/DEOFAF/022030S/09003AJ	3	5 day(s)
R978026419	MFC3HLB2.0H4/DEOFAF/022030S/09003JJ	3	5 day(s)
R978052061	MFC3HLB2.0H4/DEOFAF/022030S/09010AJ	3	10 day(s)
R978052062	MFC3HLB2.0H4/DEOFAF/022030S/09010JJ	3	10 day(s)
R978026420	MFC3HLB2.0H4/DEOFAF/028030S/09003AJ	3	10 day(s)
R978026421	MFC3HLB2.0H4/DEOFAF/028030S/09003JJ	3	10 day(s)
R978052063	MFC3HLB2.0H4/DEOFAF/028030S/09010AJ	3	10 day(s)
R978052064	MFC3HLB2.0H4/DEOFAF/028030S/09010JJ	3	10 day(s)
R978026374	MFC3HRB1.0H4/DEOFAF/011030S/09003AJ	3	10 day(s)
R978026375	MFC3HRB1.0H4/DEOFAF/011030S/09003JJ	3	10 day(s)
R978052031	MFC3HRB1.0H4/DEOFAF/011030S/09010AJ	3	10 day(s)
R978052032	MFC3HRB1.0H4/DEOFAF/011030S/09010JJ	3	10 day(s)
R978026376	MFC3HRB1.0H4/DEOFAF/016030S/09003AJ	3	10 day(s)
R978026377	MFC3HRB1.0H4/DEOFAF/016030S/09003JJ	3	10 day(s)
R978052033	MFC3HRB1.0H4/DEOFAF/016030S/09010AJ	3	10 day(s)
R978052034	MFC3HRB1.0H4/DEOFAF/016030S/09010JJ	3	10 day(s)
R978026382	MFC3HRB2.0H4/DEOFAF/022030S/09003AJ	3	10 day(s)
R978026383	MFC3HRB2.0H4/DEOFAF/022030S/09003JJ	3	5 day(s)
R978052037	MFC3HRB2.0H4/DEOFAF/022030S/09010AJ	3	10 day(s)
R978052038	MFC3HRB2.0H4/DEOFAF/022030S/09010JJ	3	10 day(s)
R978026384	MFC3HRB2.0H4/DEOFAF/028030S/09003AJ	3	5 day(s)
R978026385	MFC3HRB2.0H4/DEOFAF/028030S/09003JJ	3	5 day(s)
R978052039	MFC3HRB2.0H4/DEOFAF/028030S/09010AJ	3	10 day(s)
R978052040	MFC3HRB2.0H4/DEOFAF/028030S/09010JJ	3	10 day(s)
R978026338	MFC3VLB1.0H4/DEOFAF/011030S/09003AJ	3	10 day(s)
R978026339	MFC3VLB1.0H4/DEOFAF/011030S/09003JJ	3	10 day(s)
R978052007	MFC3VLB1.0H4/DEOFAF/011030S/09010AJ	3	10 day(s)
R978052008	MFC3VLB1.0H4/DEOFAF/011030S/09010JJ	3	10 day(s)
R978026340	MFC3VLB1.0H4/DEOFAF/016030S/09003AJ	3	10 day(s)
R978026341	MFC3VLB1.0H4/DEOFAF/016030S/09003JJ	3	10 day(s)
R978052009	MFC3VLB1.0H4/DEOFAF/016030S/09010AJ	3	10 day(s)
R978052010	MFC3VLB1.0H4/DEOFAF/016030S/09010JJ	3	10 day(s)
R978026346	MFC3VLB2.0H4/DEOFAF/022030S/09003AJ	3	10 day(s)
R978026347	MFC3VLB2.0H4/DEOFAF/022030S/09003JJ	3	10 day(s)
R978052013	MFC3VLB2.0H4/DEOFAF/022030S/09010AJ	3	10 day(s)
R978052014	MFC3VLB2.0H4/DEOFAF/022030S/09010JJ	3	10 day(s)
R978026348	MFC3VLB2.0H4/DEOFAF/028030S/09003AJ	3	10 day(s)
R978026349	MFC3VLB2.0H4/DEOFAF/028030S/09003JJ	3	10 day(s)
R978052015	MFC3VLB2.0H4/DEOFAF/028030S/09010AJ	3	10 day(s)
R978052016	MFC3VLB2.0H4/DEOFAF/028030S/09010JJ	3	10 day(s)
R978026302	MFC3VRB1.0H4/DEOFAF/011030S/09003AJ	3	10 day(s)
R978026303	MFC3VRB1.0H4/DEOFAF/011030S/09003JJ	3	10 day(s)
R978051983	MFC3VRB1.0H4/DEOFAF/011030S/09010AJ	3	10 day(s)
R978051984	MFC3VRB1.0H4/DEOFAF/011030S/09010JJ	3	10 day(s)

R978026304	MFC3VRB1.0H4/DEOFAF/016030S/09003AJ	3	10 day(s)
R978026305	MFC3VRB1.0H4/DEOFAF/016030S/09003JJ	3	10 day(s)
R978051985	MFC3VRB1.0H4/DEOFAF/016030S/09010AJ	3	10 day(s)
R978051986	MFC3VRB1.0H4/DEOFAF/016030S/09010JJ	3	10 day(s)
R978026310	MFC3VRB2.0H4/DEOFAF/022030S/09003AJ	3	10 day(s)
R978026311	MFC3VRB2.0H4/DEOFAF/022030S/09003JJ	3	10 day(s)
R978051989	MFC3VRB2.0H4/DEOFAF/022030S/09010AJ	3	10 day(s)
R978051990	MFC3VRB2.0H4/DEOFAF/022030S/09010JJ	3	10 day(s)
R978026312	MFC3VRB2.0H4/DEOFAF/028030S/09003AJ	3	10 day(s)
R978026313	MFC3VRB2.0H4/DEOFAF/028030S/09003JJ	3	10 day(s)
R978051991	MFC3VRB2.0H4/DEOFAF/028030S/09010AJ	3	10 day(s)
R978051992	MFC3VRB2.0H4/DEOFAF/028030S/09010JJ	3	10 day(s)

GoTo Focused Delivery Program: Power Packs / Motor Pumps

GoPak™ Hydraulic Power Units

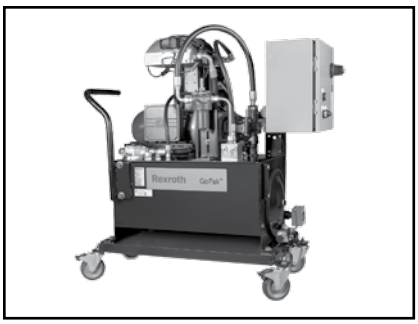

Bosch Rexroth GoPak™ hydraulic power units (HPU) bridge the gap between standard market products and engineered-to-order power units for machine tool, plastics, automotive, material handling, presses, marine, and other hydraulic applications. Rexroth's GoDesigner™ smart configurator software tool expedites the selection of pumps, motors, valves and other peripherals so customers can get quotes in a day, with lead times as short as four to six weeks (three weeks when configured with designated Rexroth "GoTo" sub-component products).

For complete engineering and design information: ***GoTo www.boschrexroth-us.com/GoPak***

Features

- Millions of variants possible (expansive feature options)
- High quality tank-top pump-motor group design
- Reservoir sizes from 5 US gallons to 200 US gallons (mineral oil fluid)
- Horsepower range from 1 to 75
- Pressure range from 200 to 4000 psi
- Pump displacement range from 4 to 140 cm3 per revolution (variable and fixed models)
- Durable and attractive powder coated finish
- Extensive and immediate document package on request - conditions apply (price and delivery, selection summary, terms and conditions, warranty, commissioning, bill of material, schematic, 2D dimensioned and ballooned drawing, interactive 3D model, highlighted sub-component data sheets)
- GoTo variants ship in 3 weeks
- Quotes provided via GoDesigner™ (advanced design configurator) in 1 business day or less
- GoDesigner™ tool provides know-as-you-go pricing, detailed engineering tools for sizing optimization, and on-the-fly detailed sub-component information
- Regional support across North America from our knowledgeable GoPak™ Champions (product, application, and design configurator expertise)

Technical Data

- Please navigate to www.boschrexroth-us.com/GoPak (USA & Mexico) or www.boschrexroth.ca/GoPak (Canada) for a complete listing of options, noting that exceptions apply; see below…
- For GoTo GoPak™ variants (3 week shipping lead-time, max quantity of 1 unit), the following features of the standard GoPak™ have been limited as noted:
  1. No combination starter with disconnect (Industrial Level). ALTERNATIVE – non-combination starter (Entry Level – no short circuit protection).
  2. No aluminum barstock manifolds. ALTERNATIVE – ductile iron barstock manifolds (Electroless Nickel surface treatment).
  3. No indirect immersion heater. ALTERNATIVE – direct immersion heaters.
  4. No custom coatings/colours. ALTERNATIVE – powder coated black.
  5. No forklift bracket. ALTERNATIVE – Use lifting strap or lugs.
  6. No driptray.

Part Number	Description	Max. Quantity	Shipment (Business Days)
R991XXXXX	GOPAK-XXXXX	1	15 day(s)

GoTo Focused Delivery Program: Accumulators

Accumulator safety blocks - ABZSS

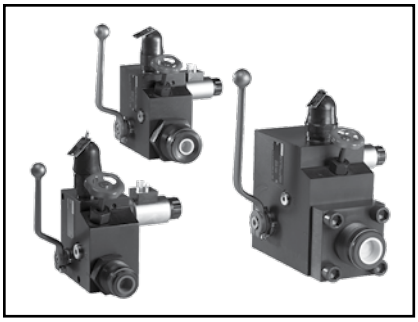

Rexroth ABZSS safety blocks can be used in any system that incorporates a hydraulic accumulator. Safety blocks not only perform safety functions such as pressure relief, unloading and isolation, but also provide a mounting base for accumulator installation and a quick means to access system pressure readings.

For complete engineering and design information: ***GoTo www.boschrexroth-us.com/GoToaccumulators***

Features

- Sizes 08 to 30
- Safety block design per DIN 24552
- Pressure relief valves can be PED type approved (CE)
- NBR (buna) and FKM (viton) seal options
- Discharge valve can be either manually or electronically actuated
- Pressure relief valve for safety purposes
- Discharge valve can drain accumulator pressure for system shut down
- Ball valve can isolate accumulator pressure from circuit
- Optional lock-out version possible
- Detailed information: RE50131

Technical Data

Nominal size	08	10	20	30	30 SO30	P30
Special option					Larger relief valve	Subplate design
Max. Operating Pressure bar (psi)	350 (5075)					
Hydraulic Fluid Temperature Range	−15°C to 80°C (5°F to 176°F)					
Hydraulic Fluid	Mineral oil to DIN 51524, HETG, HEES, HEPG to VDMA 24568					
Weight Kg (lb)	4 (8.8)	5.5 (12.1)	8.8 (19.4)	20.8 (45.8)	26.8 (59.1)	33.4 (73.5)
Protection Class	IP65 with mating connector mounted and locked					
Pressure Relief Valve Size	DBD6	DBD6	DBD10	DBD20	DBD30	DBD20

Part Number	Description	Max. Quantity	Shipment (Business Days)
R900707946	ABZSS 10 E-3X/210E/G24K4V12	3	10 day(s)
R901367389	ABZSS 10 M-3X/210E/V12	3	10 day(s)
R900707949	ABZSS 20 E-3X/210E/G24K4V12	3	10 day(s)
R901409869	ABZSS 20 E-3X/210E/S63G24K4V12	3	10 day(s)
R901409863	ABZSS 20 M-3X/210E/S63V12	3	10 day(s)
R901367388	ABZSS 20 M-3X/210E/V12	3	10 day(s)
R900707947	ABZSS 30 E-3X/210E/G24K4V12	3	10 day(s)
R901332088	ABZSS 30 M-3X/210E/V12	3	10 day(s)

GoTo Focused Delivery Program: Accessories

Electrical Connectors and Cable Sets

Electrical connectors and cable sets - applicable to GoTo directional valves

For complete engineering and design information: ***GoTo www.boschrexroth-us.com/gotoaccess***

Features

- See Technical Data for more information.

Electrical connectors

R978713598	MS CONNECTOR FOR OBE VALVES

* See RE08006

Cable sets

Mating connector and cable		
Number of poles		6 + PE
Standard interface		MIL-C 5015, VG 95 342
Protection class according to EN 60529 (mounted and fitted)		IP65 / IP67
Cable type		Li9Y11CVY
Wire cross-section	mm^2 (AWG)	7 x 0.75 (17)
Shielding braid overlap	%	85 ± 5
Outside Diameter	mm	9 ± 0.2
Color code	PE (ground)	green-yellow
	Other conductors	A: brown, B: yellow, C: green D: blue, E: gray, F: white

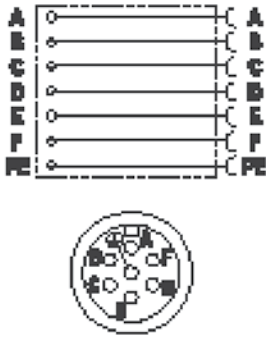

R901420496	CABLE SET	7P Z31 BF6 +10M
R901420491	CABLE SET	7P Z31 BF6 +5M

Part Number	Description	Max. Quantity	Shipment (Business Days)
R978713598	MS CONNECTOR FOR OBE VALVES	3	10 day(s)
R901420496	CABLE SET 7P Z31 BF6 +10M	5	10 day(s)
R901420491	CABLE SET 7P Z31 BF6 +5M	5	10 day(s)

GoTo Focused Delivery Program: Accessories

Coils & Handnuts - Directional Valves

Coils & handnuts - applicable to GoTo directional valves

For complete engineering and design information: ***GoTo www.boschrexroth-us.com/gotoaccess***

Features

- See Technical Data for more information.

Coils & handnuts

Material No.	SAP/Portal Description	Notes	Explanation
R900029574	NUT GZ45C-01 SPEZ	all DC	Handnut for use with standard “N9” option DC valves
R901002932	Solenoid Coil 37-K4 – R2,3 00	12 V	For high-pressure valves with DIN connection and K4 plug
R901002319	Solenoid Coil 37-K4 – R4,8 00	24 V (1200 mA)	For high-pressure valves with DIN connection and K4 plug
R900991678	Solenoid Coil 37-K4 – 22G12 00	12 V	For high-pressure valves with DIN connection and K4 plug
R900991121	Solenoid Coil 37-K4 – 22G24 00	24 V	For high-pressure valves with DIN connection and K4 plug
R901003055	Solenoid Coil 37-K40 – R2,3 00	12 V	For high-pressure valves with Deutsch connection and K40 plug
R901050010	Solenoid Coil 37-K40 – R11,500	24 V -(800 mA)	For high-pressure valves with Deutsch connection and K40 plug
R901003053	Solenoid Coil 37-K40 – R4,8 00	24 V (1200 mA)	For high-pressure valves with Deutsch connection and K40 plug
R900729189	Solenoid Coil 37-K40 – 22G12 00	12 V	For high-pressure valves with Deutsch connection and K40 plug
R900729190	Solenoid Coil 37-K40 – 22G24 00	24 V	For high-pressure valves with Deutsch connection and K40 plug
R901272648	Solenoid Coil 45-K40 – R3.3 00	12 V	For high-pressure valves with Deutsch connection and K40 plug
R901272647	Solenoid Coil 45-K40 – R7.2 00	24 V	For high-pressure valves with Deutsch connection and K40 plug

Part Number	Description	Max. Quantity	Shipment (Business Days)
R900029574	NUT GZ45C-01 SPEZ	3	10 day(s)
R901002932	SOLENOID COIL 37-K4 - R2,3 00	3	10 day(s)
R901002319	SOLENOID COIL 37-K4 - R4,8 00	3	10 day(s)
R900991678	SOLENOID COIL 37-K4 -22G12 00	3	10 day(s)
R900991121	SOLENOID COIL 37-K4 -22G24 00	3	10 day(s)
R901050010	SOLENOID COIL 37-K40 - R11,500	3	10 day(s)
R901003055	SOLENOID COIL 37-K40 - R2,3 00	3	10 day(s)
R901003053	SOLENOID COIL 37-K40 - R4,8 00	3	10 day(s)
R900729189	SOLENOID COIL 37-K40 -22G12 00	3	10 day(s)
R900729190	SOLENOID COIL 37-K40 -22G24 00	3	10 day(s)
R901022180	SOLENOID COIL 45-K4 - R3,3 00	3	10 day(s)
R901370939	SOLENOID COIL 45-K4 -30G24 04	3	10 day(s)
R901338900	SOLENOID COIL 45-K4 -30G96 01	3	10 day(s)
R901272648	SOLENOID COIL 45-K40 - -R3.3 00	3	10 day(s)
R901272647	SOLENOID COIL 45-K40 - -R7.2 00	3	10 day(s)

GoTo Focused Delivery Program: Aftermarket Parts

Seal Kits

Seal kits for AZPF, AZPN, AZMF, A2F, A4VG, A4VS, & A6V pumps and motors

For complete engineering and design information: ***GoTo www.boschrexroth-us.com/gotoaftermarket***

Features

- See Technical Data for more information.

AZMF Seals

Part Number	Description
1510283065	ROTARY SHAFT LIP
1517010195	SEAL KIT

AZPF Seals

1510283035	ROTARY SHAFT LIP
1517010152	SEAL KIT (BUNA)
1510283008	SHAFT SEAL (BUNA)

AZPN Seals

1510283023	ROTARY SHAFT LIP
1517010194	SEAL KIT

A2F Seals

R987053790	SEAL KT A/AA2FM/O/E107-125/61-V
R987053791	SEAL KT A/AA2FM/O/E160-180/61-V
R987053779	SEAL KT A/AA2FM/O/E23-32/61-V
R987053787	SEAL KT A/AA2FM/O/E45/61-V
R987053788	SEAL KT A/AA2FM/O/E56-63/61-V
R987053789	SEAL KT A/AA2FM/O/E80-90/61-V
R987053786	SEAL KT A/AA2FM/O10-16/61-V

A4VG Seals

Part Number	Description
R987053882	SEAL KT AA4VG125/32-N
R987053887	SEAL KT AA4VG180/32-N
R987053936	SEAL KT AA4VG250/32-N
R987053885	SEAL KT AA4VG28/32-N
R987054641	SEAL KT AA4VG40/32-N
R987053884	SEAL KT AA4VG56/32-N
R987053886	SEAL KT AA4VG71/32-N
R987053883	SEAL KT AA4VG90/32-N

A4VS Seals

R902416678	SEAL KIT A4VS180/30-V pump only
R902416662	SEAL KIT .A4VS125/30-P pump only
R902416680	SEAL KIT .A4VS125/30-V pump only
R902416679	SEAL KIT .A4VS180/30-P pump only
R902416677	SEAL KIT .A4VS250/30-V pump only
R902416676	SEAL KIT A4VS250/30-P pump only

A6V Seals

R987054740	SEAL KT AA6VM107/63-V
R987053876	SEAL KT AA6VM160/63-V
R987053873	SEAL KT AA6VM55/63-V
R987053874	SEAL KT AA6VM80/63-V

Valve Seals

R900890976	SEAL KIT –10/3V (M7-22)

Part Number	Description	Max. Quantity	Shipment (Business Days)
1510283065	ROTARY SHAFT LIP AZMF MOTOR	3	10 day(s)
1517010195	SEAL KIT AZMF MOTOR	3	10 day(s)
1510283035	ROTARY SHAFT LIP .	3	10 day(s)
1517010152	SEAL KIT (BUNA) AZPF PUMP	3	10 day(s)
1510283008	ROTARY SHAFT LIP AZPF PUMP	3	10 day(s)
1510283023	ROTARY SHAFT LIP AZPN PUMP	3	10 day(s)
1517010194	SEAL KIT AZPN PUMP	3	10 day(s)
R987053790	SEAL KT A/AA2FM/O/E107-125/61-V	3	3 day(s)
R987053791	SEAL KT A/AA2FM/O/E160-180/61-V	3	3 day(s)
R987053779	SEAL KT A/AA2FM/O/E23-32/61-V	3	3 day(s)
R987053787	SEAL KT A/AA2FM/O/E45/61-V	3	3 day(s)
R987053788	SEAL KT A/AA2FM/O/E56-63/61-V	3	3 day(s)
R987053789	SEAL KT A/AA2FM/O/E80-90/61-V	3	3 day(s)
R987053786	SEAL KT A/AA2FM/O10-16/61-V	3	3 day(s)
R987053882	SEAL KT AA4VG125/32.-N	3	10 day(s)
R987053887	SEAL KT AA4VG180/32-N	3	10 day(s)
R987053936	SEAL KT AA4VG250/32-N	3	10 day(s)
R987053885	SEAL KT AA4VG28/32-N	3	10 day(s)
R987054641	SEAL KT AA4VG40/32-N	3	10 day(s)
R987053884	SEAL KT AA4VG56/32-N	3	10 day(s)
R987053886	SEAL KT AA4VG71/32-N	3	10 day(s)
R987053883	SEAL KT AA4VG90/32-N	3	10 day(s)
R902416678	SEAL KIT O.VENT.A4VS180/30-V+	3	10 day(s)
R902416662	SEAL KIT O.VENT.A4VS125/30-P+	3	10 day(s)
R902416680	SEAL KIT O.VENT.A4VS125/30-V+	3	10 day(s)
R902416679	SEAL KIT O.VENT.A4VS180/30-P+	3	10 day(s)
R902416677	SEAL KIT O.VENT.A4VS250/30-V+	3	10 day(s)
R902416676	SEAL KIT O.VENT.A4VS250/30-P+	3	10 day(s)
R987054740	SEAL KT AA6VM107/63-V	3	10 day(s)
R987053876	SEAL KT AA6VM160/63.V	3	10 day(s)
R987053873	SEAL KT AA6VM55/63-V	3	10 day(s)
R987053874	SEAL KT AA6VM80/63.V	3	10 day(s)
R900890976	SEAL KIT -10/3V LADER (M7-22)	3	3 day(s)

GoTo Focused Delivery Program: Aftermarket Parts

A10 Service Parts Kits

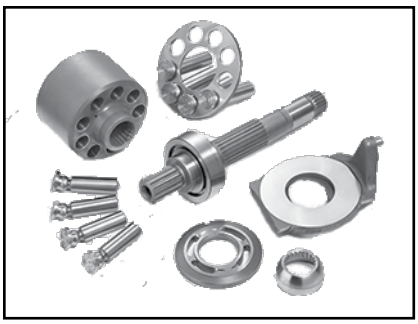

A10 service parts kits for AA10VSO series 30 and 31

For complete engineering and design information: ***GoTo www.boschrexroth-us.com/gotoaftermarket***

Features

- See Technical Data for more information.

Size 18

Part Number	Description
R910941171	SEAL KIT (VITON)
R910948589	BEARING KIT
R910948590	ROTARY GROUP RH – RIGHT HAND ROTATION
R910948591	ROTARY GROUP LH – LEFT HAND ROTATION

Size 28

R910932983	SEAL KIT (VITON)
R910942158	BEARING KIT
R910947781	ROTARY GROUP RH – RIGHT HAND ROTATION
R910947782	ROTARY GROUP LH – LEFT HAND ROTATION

Size 45

R910932984	SEAL KIT (VITON)
R902487515	SEAL KIT (VITON) - SERIES 53
R910963478	SEAL KIT (BUNA)
R910942248	BEARING KIT
R910947730	ROTARY GROUP RH – RIGHT HAND ROTATION
R910947789	ROTARY GROUP LH – LEFT HAND ROTATION

Size 71

R910932985	SEAL KIT (VITON)
R910942250	BEARING KIT
R910947801	ROTARY GROUP RH – RIGHT HAND ROTATION
R910947802	ROTARY GROUP LH – LEFT HAND ROTATION

Size 100

R910941168	SEAL KIT (VITON)
R910948602	BEARING KIT
R910948603	ROTARY GROUP RH – RIGHT HAND ROTATION
R910948604	ROTARY GROUP LH – LEFT HAND ROTATION

Size 140

R910941170	SEAL KIT (VITON)
R910948615	BEARING KIT
R910948617	ROTARY GROUP RH – RIGHT HAND ROTATION
R910948618	ROTARY GROUP LH – LEFT HAND ROTATION

Part Number	Description	Max. Quantity	Shipment (Business Days)
R910948602	BEARING SET KLEINTEI.A10V100+VERP	3	10 day(s)
R910948615	BEARING SET KLEINTEI.A10V140+VERP	3	10 day(s)
R910948589	BEARING SET KLEINTEIL.A10V18+VERP	3	10 day(s)
R910942158	BEARING SET KLEINTEILA10V28	3	10 day(s)
R910942248	BEARING SET KLEINTEILA10V45	3	10 day(s)
R910942250	BEARING SET KLEINTEILA10V71	3	10 day(s)
R910948604	ROTARY GROUP A10V100/31L+VERP	3	10 day(s)
R910948603	ROTARY GROUP A10V100/31R+VERP	3	10 day(s)
R910948618	ROTARY GROUP A10V140/31L+VERP	3	10 day(s)
R910948617	ROTARY GROUP A10V140/31R+VERP	3	10 day(s)
R910948591	ROTARY GROUP A10V18/31L+VERP	3	10 day(s)
R910948590	ROTARY GROUP A10V18/31R+VERP	3	10 day(s)
R910947782	ROTARY GROUP LH A10V28/31L	3	10 day(s)
R910947789	ROTARY GROUP LH A10V45/31L	3	10 day(s)
R910947802	ROTARY GROUP LH A10V71/31L	3	10 day(s)
R910947781	ROTARY GROUP RH A10V28/31R	3	10 day(s)
R910947730	ROTARY GROUP RH A10V45/31R	3	10 day(s)
R910947801	ROTARY GROUP RH A10V71/31R	3	10 day(s)
R910932983	SEAL KIT (VITON) A10V 28 DFR-V KIT	3	10 day(s)
R910932984	SEAL KIT (VITON) A10V 45 DFLR/31V	3	10 day(s)
R910932985	SEAL KIT (VITON) A10V 71 DFLR/31V	3	10 day(s)
R910941171	SEAL KIT A10V 18 DFR /31V+VERP	3	10 day(s)
R902487515	SEAL KIT A10V 45 /53V+VERP	3	3 day(s)
R910941168	SEAL KIT A10V100 DFLR/31V+VERP	3	10 day(s)
R910941170	SEAL KIT A10V140 DFLR/31V+VERP	3	10 day(s)
R910963478	SEAL KIT AA10VO 45 /50-P +VERP	3	3 day(s)

GoTo Focused Delivery Program: Aftermarket Parts

Rineer Service Kits

See part description for more information.

For complete engineering and design information: ***GoTo www.boschrexroth-us.com/GoToaftermarket***

Features

- See part description for more information.

Part Number	Description		Max. Quantity	Shipment (Business Days)
R986V01643	Seal Kit		3	10 day(s)
R986V01651	Seal Kit		3	10 day(s)
R986V01687	Seal Kit		3	10 day(s)
R986V01689	Seal Kit		3	10 day(s)
R986V01690	Seal Kit		3	10 day(s)
R986V01696	Seal Kit		3	10 day(s)
R986V01747	Seal Kit		3	10 day(s)
R986V04301	Seal Kit		3	10 day(s)
R986V04286	Service Kit		3	10 day(s)
R986V01702	SERVICE KIT	SE0371920	3	10 day(s)
R986V02033	Spring Pack		3	10 day(s)
R986V02035	Spring Pack		3	10 day(s)
R986V02036	Spring Pack		3	10 day(s)
R986V02037	Spring Pack		3	10 day(s)

rexroth
A Bosch Company

Bosch Rexroth USA
Headquarters
14001 South Lakes Drive
Charlotte, NC 28273
Telephone (800) REXROTH
(800) 739-7684
info@boschrexroth-us.com
www.boschrexroth-us.com/goto

Bosch Rexroth Canada
Headquarters
490 Prince Charles Drive South
Welland, ON L3B 5X7
Telephone (855) REXROTH
(855) 739-7684
info@boschrexroth.ca
www.boschrexroth.ca/goto

Bosch Rexroth Mexico
Av. Tejocotes y camino Viejo a la Lumbrera S/N LT2
Col. San Martin Obispo
Cuautitlán Izcalli, Estado de México.
C.P. 54769
México
Telephone: +52 (55) 57 47 0800
info.dcmx@boschrexroth.com.mx
www.boschrexroth.com.mx/goto

USH00011/07.2021 Replaces: 03.2021
© Bosch Rexroth Corporation 2021
Printed in the United States